# NOCCHI Multi EVO

## CENTRIFUGAL MULTISTAGE ELECTRIC PUMPS

NEW 2016 PENTAIR

IE3 MOTOR

Multi EVO is an horizontal multistage centrifugal electric pump with an axial threaded suction port and a radial threaded discharge port. The innovative, high-efficiency hydraulic system is connected to a latest generation motor with mechanical seal.

All models are certified for use with household water (ACS and DM174)

### ADVANTAGES

Electric pumps in the Multi EVO series offer the following advantages:

- Low energy consumption thanks to high-efficiency hydraulic system.
- High performance
- High-level reliability - thanks to the resistant and innovative design
- Silent operation - improved user comfort thanks to its silent operation
- Compact form
- Wide range

### SPECIFICATIONS:

#### PUMP

- Hydraulic performance conforms to ISO 9906:2012 - Grade 3B
- Type of liquid: clean water with no suspended solids or abrasive material
- Maximum liquid temperature 50°C
- Maximum operating pressure 8 bar
- Maximum recommended suction height 6m with foot valve

#### MOTOR

- Enclosed, air ventilated (TEFC)
- 2 poles, 50 Hz (n=2850 rpm)
- IE3 three-phase AC (P2 ≥ 0.75 kW)
- Protection class: IP55
- Insulation class: F
- Maximum room temperature 40°C
- Single phase power supply with permanently inserted condenser and thermal protection incorporated into motor winding

Eco Select™ Efficiency • Conservation PENTAIR

### APPLICATIONS

- Pressurization and supply
- Irrigation
- Re-utilization of rainwater
- Cleaning systems

# **NOCCHI** Multi EVO
## CENTRIFUGAL MULTISTAGE ELECTRIC PUMPS

### DESIGN FEATURES

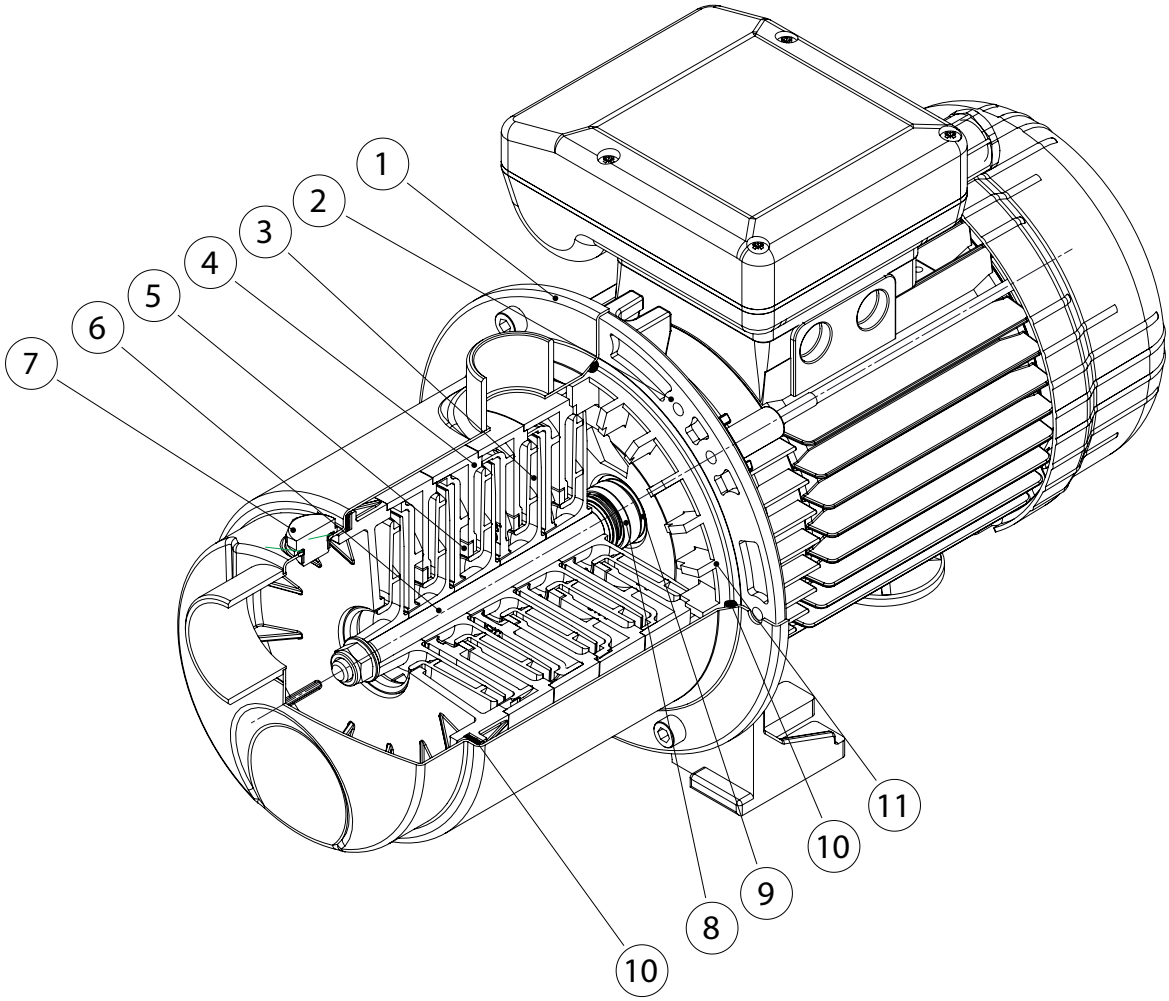


### TABLE OF MATERIALS

| Ref. | Component | Material |
|---|---|---|
| 1 | Pump body | Stainless steel<br>Europe: EN10088-1 X5CrNi18-10 (1.4301) USA: AISI 304 |
| 2 | Motor casing | Die-cast aluminium |
| 3 | Impeller | Fibreglass reinforced PPO |
| 4 | Diffuser | Fibreglass reinforced PPO |
| 5 | Wear ring | PTFE |
| 6 | Shaft (hydraulic part) | Stainless steel<br>Europe: EN10088-1 X5CrNi18-10 (1.4301) USA: AISI 304 |
| 7 | Inlet / outlet caps | Stainless steel<br>Europe: EN10088-1 X8CrNiS18-9 (1.4305) USA: AISI 303 |
| 8 | Mechanical seal | Carbon graphite / NBR / SS<br>Europe: EN10088-1 X5CrNi18-10 (1.4301) USA: AISI 304 |
| 9 | Counterface | Ceramic / NBR |
| 10 | Gaskets | NBR 70 Shore A |
| 11 | Seal holder plate | Fibreglass reinforced PPO |

# **NOCCHI** Multi EVO 3
## CENTRIFUGAL MULTISTAGE ELECTRIC PUMPS

### HYDRAULIC PERFORMANCE

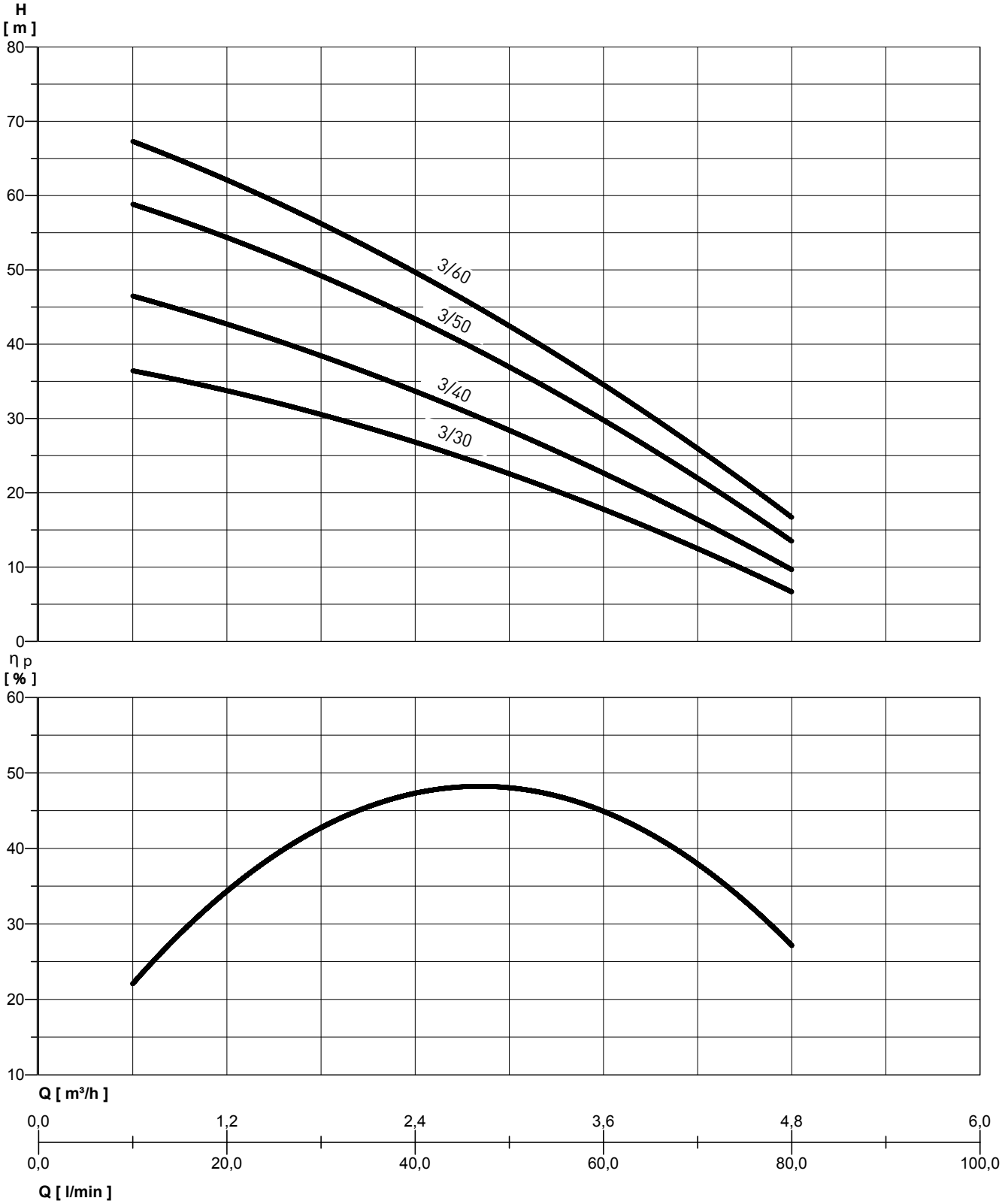

# **NOCCHI** Multi EVO 3
## CENTRIFUGAL MULTISTAGE ELECTRIC PUMPS

### PERFORMANCE TABLE

| MODEL | Nominal power (P2) | | Absorbed power (P1) | | Voltage (V) | In (A) | µF | Q | l/min | 10 | 20 | 30 | 40 | 50 | 60 | 80 |
|---|---|---|---|---|---|---|---|---|---|---|---|---|---|---|---|---|
| | HP | kW | HP | kW | | | | | m³/h | 0,6 | 1,2 | 1,8 | 2,4 | 3 | 3,6 | 4,8 |
| Multi EVO 3-30 M | 0,54 | 0,4 | 0,87 | 0,65 | 1 ~ 230 | 2,95 | 12,5 | total head in metres water column | | 36 | 34 | 31 | 27 | 22,5 | 17 | 7 |
| Multi EVO 3-30 T | 0,54 | 0,4 | 0,87 | 0,65 | 3 ~ 230/400 | 2,3 / 1,3 | --- | | | | | | | | | |
| Multi EVO 3-40 M | 0,74 | 0,55 | 1,1 | 0,8 | 1 ~ 230 | 3,7 | 12,5 | | | 46 | 43 | 39 | 34 | 28 | 22 | 10 |
| Multi EVO 3-40 T | 0,71 | 0,53 | 1,05 | 0,78 | 3 ~ 230/400 | 2,7 / 1,55 | --- | | | | | | | | | |
| Multi EVO 3-50 M | 0,94 | 0,7 | 1,34 | 1 | 1 ~ 230 | 4,4 | 16 | | | 58 | 55 | 50 | 44 | 36 | 29 | 14 |
| Multi EVO 3-50 T | 0,94 | 0,7 | 1,34 | 1 | 3 ~ 230/400 | 3,3 / 1,9 | --- | | | | | | | | | |
| Multi EVO 3-60 M | 1,2 | 0,9 | 1,68 | 1,25 | 1 ~ 230 | 5,8 | 20 | | | 67 | 62 | 57 | 50 | 42 | 34 | 17 |
| Multi EVO 3-60 T | 1,1 | 0,82 | 1,57 | 1,17 | 3 ~ 230/400 | 3,5 / 2 | --- | | | | | | | | | |

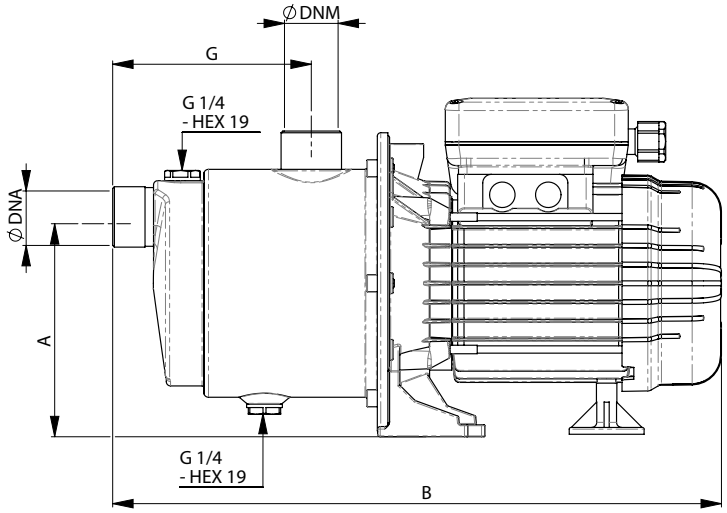


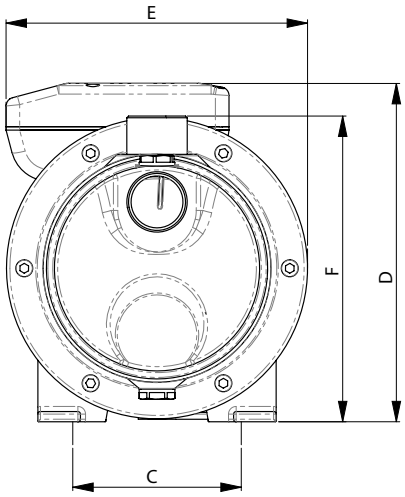


### OVERALL DIMENSIONS AND WEIGHTS

| MODEL | Dimensions mm. | | | | | | | | | Weight (Kg) |
|---|---|---|---|---|---|---|---|---|---|---|
| | A | B | C | D | E | F | G | DNA | DNM | |
| Multi EVO 3-30 M | 129 | 356 | 100 | 199 | 177 | 180 | 116 | 1" | 1" | 6,7 |
| Multi EVO 3-30 T | 129 | 356 | 100 | 199 | 177 | 180 | 116 | 1" | 1" | 6,7 |
| Multi EVO 3-40 M | 129 | 356 | 100 | 199 | 177 | 180 | 116 | 1" | 1" | 7,1 |
| Multi EVO 3-40 T | 129 | 356 | 100 | 199 | 177 | 180 | 116 | 1" | 1" | 7,1 |
| Multi EVO 3-50 M | 129 | 400 | 100 | 207 | 177 | 180 | 139 | 1" | 1" | 9,1 |
| Multi EVO 3-50 T | 129 | 400 | 100 | 207 | 177 | 180 | 139 | 1" | 1" | 9,1 |
| Multi EVO 3-60 M | 129 | 422 | 100 | 207 | 177 | 180 | 161 | 1" | 1" | 10,8 |
| Multi EVO 3-60 T | 129 | 422 | 100 | 207 | 177 | 180 | 161 | 1" | 1" | 10,8 |

# **NOCCHI** Multi EVO 5
## CENTRIFUGAL MULTISTAGE ELECTRIC PUMPS

### HYDRAULIC PERFORMANCE

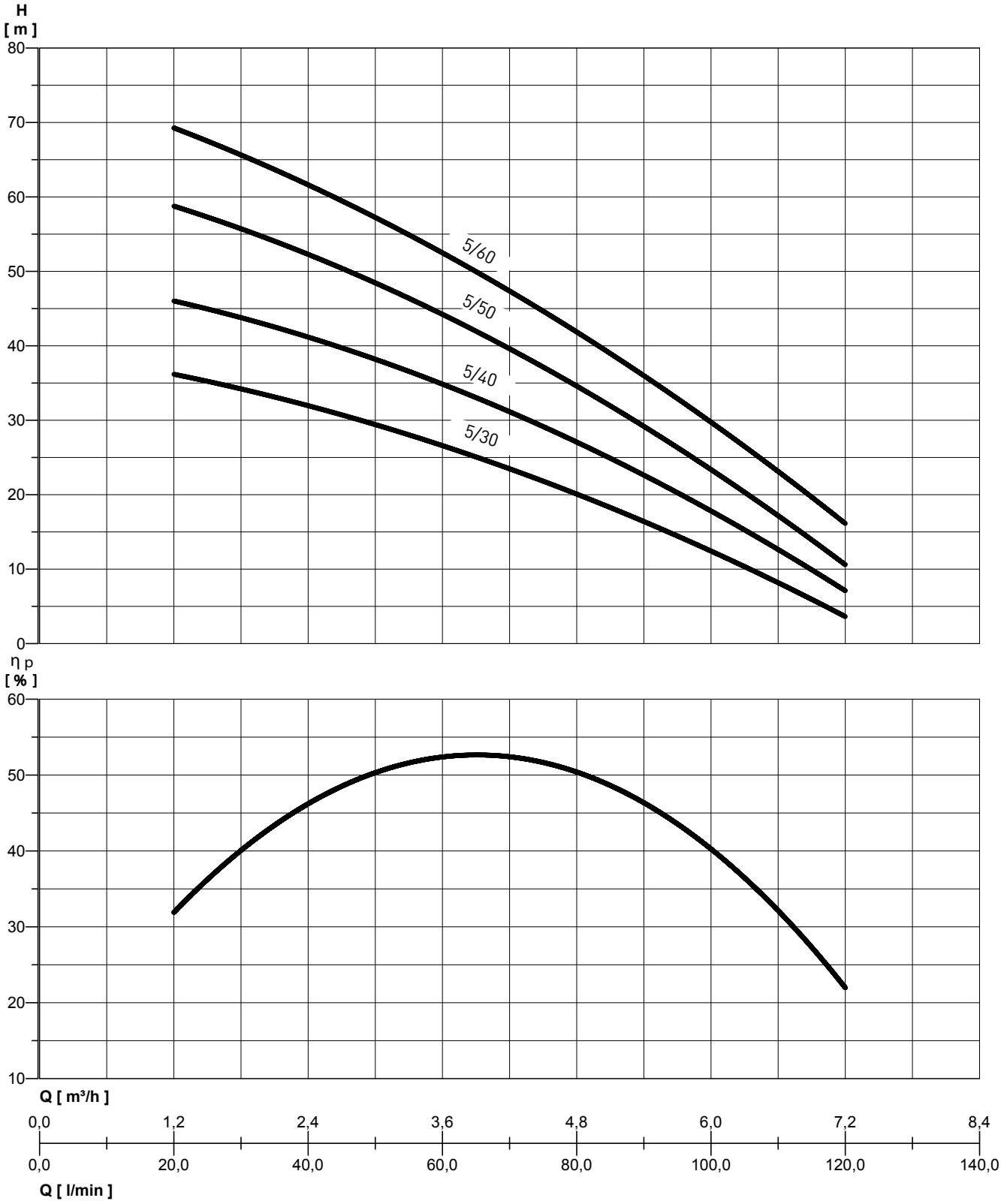

# **NOCCHI** Multi EVO 5
## CENTRIFUGAL MULTISTAGE ELECTRIC PUMPS

### PERFORMANCE TABLE

| MODEL | Nominal power (P2) | | Absorbed power (P1) | | Voltage (V) | In (A) | µF | Q | l/min | 20 | 30 | 40 | 50 | 60 | 80 | 100 | 120 |
|---|---|---|---|---|---|---|---|---|---|---|---|---|---|---|---|---|---|
| | HP | kW | HP | kW | | | | | $m^3/h$ | 1,2 | 1,8 | 2,4 | 3 | 3,6 | 4,8 | 6 | 7,2 |
| Multi EVO 5-30 M | 0,75 | 0,55 | 1,1 | 0,8 | 1 ~ 230 | 3,7 | 12,5 | total head in metres water column | | 36 | 34 | 32 | 30 | 27 | 19,5 | 12 | 4 |
| Multi EVO 5-30 T | 0,71 | 0,53 | 1,05 | 0,78 | 3 ~ 230/400 | 2,7 / 1,55 | --- | | | | | | | | | | |
| Multi EVO 5-40 M | 1 | 0,75 | 1,5 | 1,1 | 1 ~ 230 | 4,7 | 16 | | | 46 | 44 | 41 | 38 | 35 | 27 | 18 | 7 |
| Multi EVO 5-40 T | 1 | 0,75 | 1,5 | 1,1 | 3 ~ 230/400 | 3,5 / 2 | --- | | | | | | | | | | |
| Multi EVO 5-50 M | 1,27 | 0,95 | 1,8 | 1,35 | 1 ~ 230 | 6,2 | 20 | | | 58 | 56 | 53 | 49 | 44 | 34 | 23 | 11 |
| Multi EVO 5-50 T | 1,2 | 0,9 | 1,68 | 1,25 | 3 ~ 230/400 | 3,7 / 2,1 | --- | | | | | | | | | | |
| Multi EVO 5-60 M | 1,6 | 1,2 | 2,2 | 1,65 | 1 ~ 230 | 7,5 | 31.5 | | | 69 | 66 | 62 | 57 | 52 | 42 | 30 | 16 |
| Multi EVO 5-60 T | 1,6 | 1,2 | 2,1 | 1,57 | 3 ~ 230/400 | 5,3 / 3,1 | --- | | | | | | | | | | |

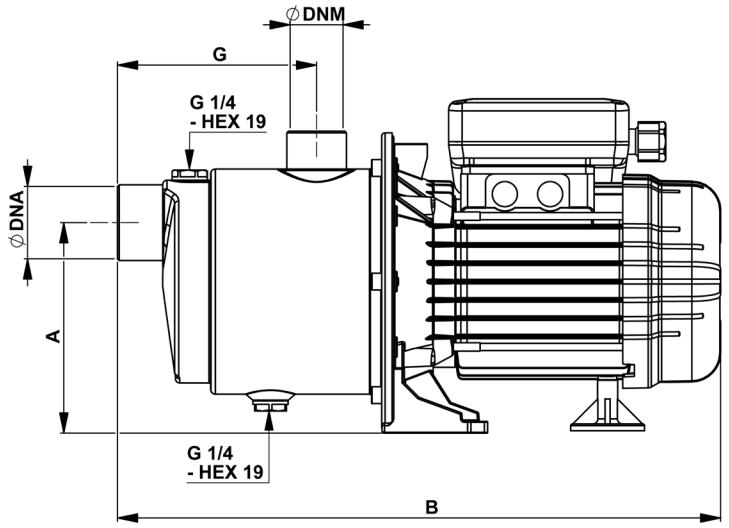


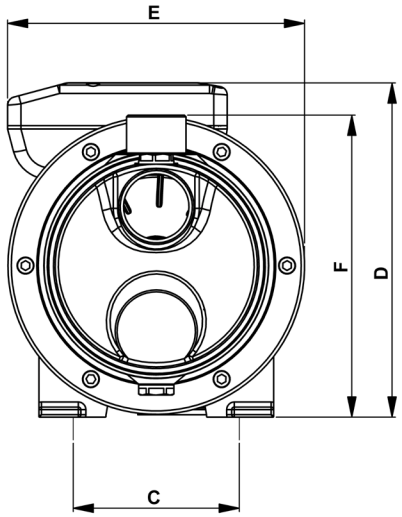


### OVERALL DIMENSIONS AND WEIGHTS

| MODEL | Dimensions mm. | | | | | | | | | Weight (Kg) |
|---|---|---|---|---|---|---|---|---|---|---|
| | A | B | C | D | E | F | G | DNA | DNM | |
| Multi EVO 5-30 M | 125 | 360 | 100 | 199 | 177 | 180 | 119 | 1" 1/4 | 1" | 7,1 |
| Multi EVO 5-30 T | 125 | 360 | 100 | 199 | 177 | 180 | 119 | 1" 1/4 | 1" | 7,1 |
| Multi EVO 5-40 M | 125 | 380 | 100 | 207 | 177 | 180 | 119 | 1" 1/4 | 1" | 8,8 |
| Multi EVO 5-40 T | 125 | 380 | 100 | 207 | 177 | 180 | 119 | 1" 1/4 | 1" | 8,8 |
| Multi EVO 5-50 M | 125 | 402 | 100 | 207 | 177 | 180 | 142 | 1" 1/4 | 1" | 10,4 |
| Multi EVO 5-50 T | 125 | 402 | 100 | 207 | 177 | 180 | 142 | 1" 1/4 | 1" | 10,4 |
| Multi EVO 5-60 M | 125 | 457 | 100 | 215 | 203 | 180 | 164 | 1" 1/4 | 1" | 13,5 |
| Multi EVO 5-60 T | 125 | 457 | 100 | 215 | 177 | 180 | 164 | 1" 1/4 | 1" | 13,5 |

# **NOCCHI** Multi EVO 8
## CENTRIFUGAL MULTISTAGE ELECTRIC PUMPS

### HYDRAULIC PERFORMANCE

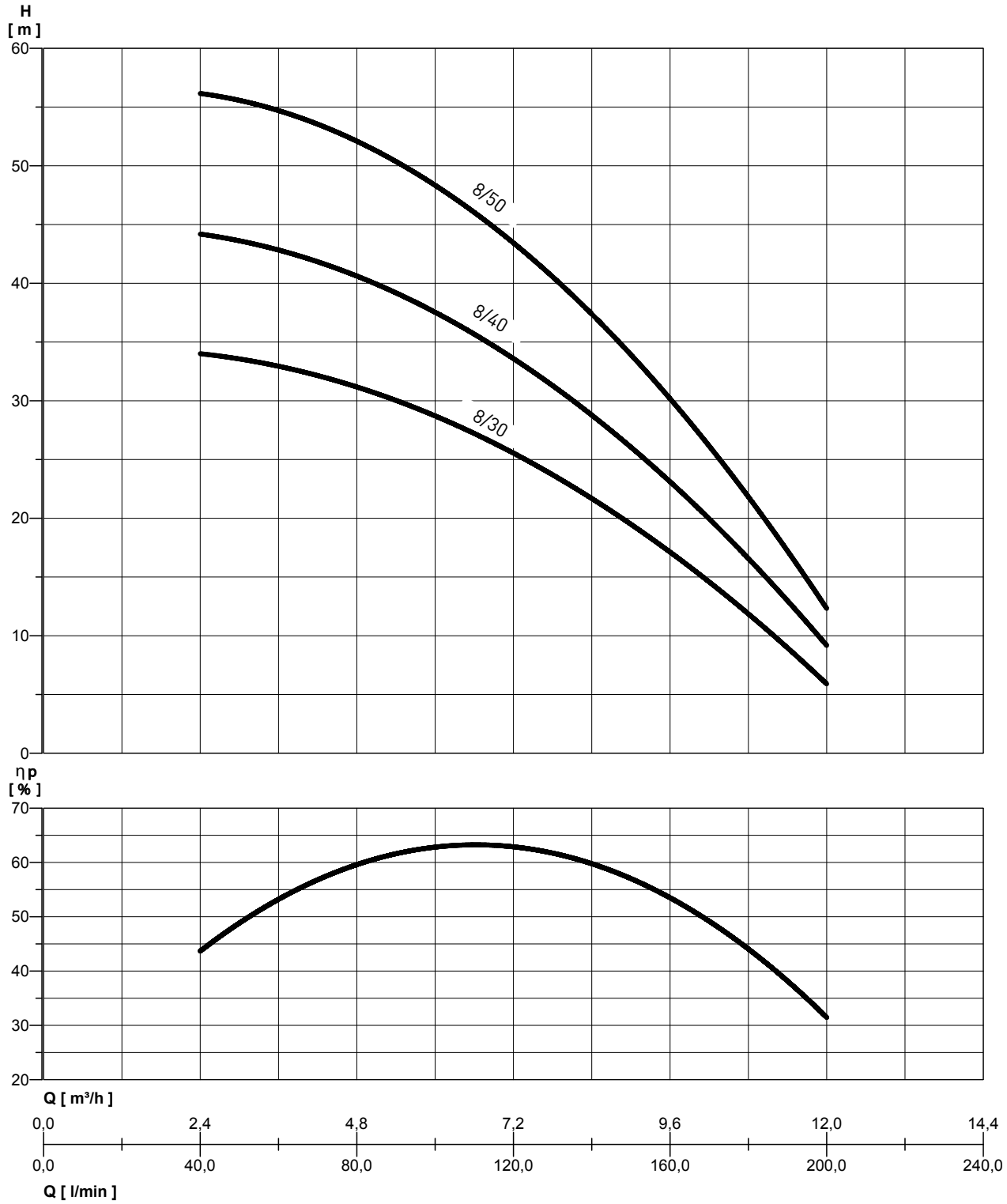

# **NOCCHI** Multi EVO 8
## CENTRIFUGAL MULTISTAGE ELECTRIC PUMPS

### PERFORMANCE TABLE

| MODEL | Nominal power (P2) | | Absorbed power (P1) | | Voltage (V) | In (A) | µF | Q | l/min | 40 | 60 | 80 | 100 | 120 | 140 | 160 | 180 | 200 |
|---|---|---|---|---|---|---|---|---|---|---|---|---|---|---|---|---|---|---|
| | HP | kW | HP | kW | | | | | m³/h | 2,4 | 3,6 | 4,8 | 6 | 7,2 | 8,4 | 9,6 | 10,8 | 12 |
| Multi EVO 8-30 M | 1,2 | 0,9 | 1,7 | 1,28 | 1 ~ 230 | 5,9 | 20 | total head in metres water column | | 34 | 33,5 | 31 | 29 | 25,5 | 22 | 16,5 | 12 | 6 |
| Multi EVO 8-30 T | 1,2 | 0,9 | 1,6 | 1,2 | 3 ~ 230/400 | 3,7 / 2,1 | --- | | | | | | | | | | | |
| Multi EVO 8-40 M | 1,6 | 1,2 | 2,23 | 1,66 | 1 ~ 230 | 7,7 | 31.5 | | | 44,5 | 42,5 | 40,5 | 37,5 | 34 | 29 | 23 | 16 | 9,5 |
| Multi EVO 8-40 T | 1,6 | 1,18 | 2 | 1,5 | 3 ~ 230/400 | 5 / 2,95 | --- | | | | | | | | | | | |
| Multi EVO 8-50 M | 1,9 | 1,4 | 2,7 | 2 | 1 ~ 230 | 9 | 35 | | | 56,5 | 54,5 | 51,5 | 48,5 | 44 | 37,5 | 30 | 21,5 | 12,5 |
| Multi EVO 8-50 T | 1,9 | 1,4 | 2,6 | 1,95 | 3 ~ 230/400 | 6,7 / 4 | --- | | | | | | | | | | | |

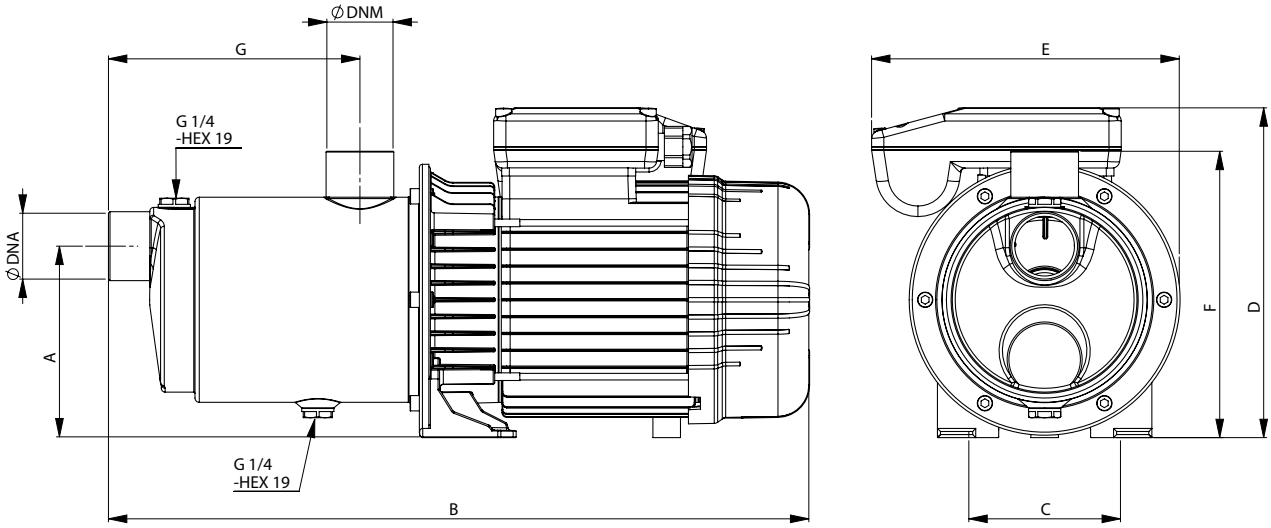


### OVERALL DIMENSIONS AND WEIGHTS

| MODEL | Dimensions mm. | | | | | | | | | Weight (Kg) |
|---|---|---|---|---|---|---|---|---|---|---|
| | A | B | C | D | E | F | G | DNA | DNM | |
| Multi EVO 8-30 M | 125 | 398 | 100 | 207 | 177 | 187 | 137 | 1"1/4 | 1"1/4 | 10,5 |
| Multi EVO 8-30 T | 125 | 398 | 100 | 207 | 177 | 187 | 137 | 1"1/4 | 1"1/4 | 10,5 |
| Multi EVO 8-40 M | 125 | 430 | 100 | 215 | 203 | 187 | 137 | 1"1/4 | 1"1/4 | 13,4 |
| Multi EVO 8-40 T | 125 | 430 | 100 | 215 | 177 | 187 | 137 | 1"1/4 | 1"1/4 | 13,4 |
| Multi EVO 8-50 M | 125 | 457 | 100 | 215 | 203 | 187 | 164 | 1"1/4 | 1"1/4 | 14,5 |
| Multi EVO 8-50 T | 125 | 457 | 100 | 215 | 177 | 187 | 164 | 1"1/4 | 1"1/4 | 14,5 |