CP

Centrifugal pumps

PERFORMANCE RANGE

- Flow rate up to **160 l/min** (9.6 m^3/h)
- Head up to **58 m**

APPLICATION LIMITS

- Manometric suction lift up to **7 m**
- Liquid temperature between **-10 °C** and **+90 °C**
  (up to +40 for the version with the technopolymer impeller)
- Ambient temperature up to **+40 °C**
- Max. working pressure:
  – **6 bar** for CP 100-130-132-150-158
  – **10 bar** for CP 170-190-200
- Continuous service **S1**

CONSTRUCTION AND SAFETY STANDARDS

EN 60034-1
IEC 60034-1
CEI 2-3

CERTIFICATIONS

АИЗО

ПРОМТЕСТ - 168

INSTALLATION AND USE

Suitable for use with clean water and liquids that are not chemically aggressive towards the materials from which the pump is made. As a result of their reliability and the fact that they are easy to use, these pumps are widely used in domestic and civil applications such as the distribution of water in combination with small and medium sized pressure sets, for transferring liquids and for the irrigation of gardens and allotments.
The pump should be installed in an enclosed environment, or at least sheltered from inclement weather.

PATENTS - TRADE MARKS - MODELS

- Registered Community Design n° 406160-0001

OPTIONALS AVAILABLE ON REQUEST

- Pump with technopolymer impeller
- Special mechanical seal
- Other voltages or 60 Hz frequency
- IP55 class protection for CP 170, CP 170M

GUARANTEE

2 years subject to terms and conditions

CHARACTERISTIC CURVES AND PERFORMANCE DATA

50 Hz n= 2900 1/min HS= 0 m

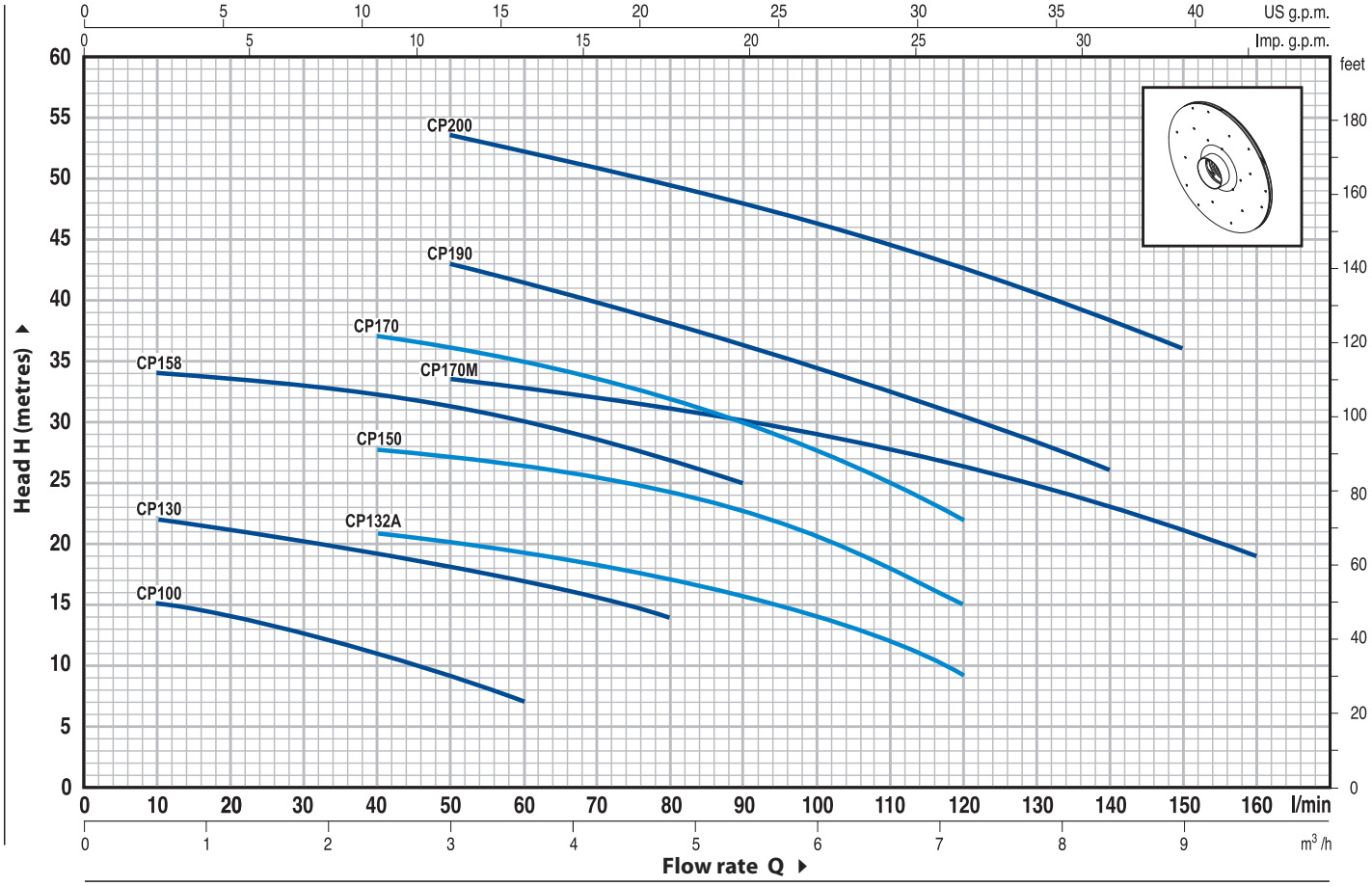

MODEL Single-phase	MODEL Three-phase	POWER kW	POWER HP	Q m³/h	0	0.6	1.2	1.8	2.4	3.0	3.6	4.2	4.8	5.4	6.0	6.6	7.2	7.8	8.4	9.0	9.6
				Q l/min	**0**	**10**	**20**	**30**	**40**	**50**	**60**	**70**	**80**	**90**	**100**	**110**	**120**	**130**	**140**	**150**	**160**
CPm 100	–	0.25	0.33		16	15	14	12.5	11	9	7										
CPm 130	**CP 130**	0.37	0.50		23	22	21	20	19	18	17	15.5	14								
CPm 132A	**CP 132A**	0.60	0.85		23	–	22	21.5	21	20	19	18	17	16	14	12	9				
CPm 150	**CP 150**	0.75	1		29.5	–	29	28.5	28	27.5	26.5	26	24.5	23	21	18	15				
CPm 158	**CP 158**	0.75	1	**H** metres	36	34	33.5	33	32.5	31.5	30	28.5	27	25							
CPm 170	**CP 170**	1.1	1.5		41	–	–	38	37	36	35	33.5	32	30	27.5	25	22				
CPm 170M	**CP 170M**	1.1	1.5		36	–	–	35	34.5	33.5	33	32	31	30	29	28	26.5	25	23	21	19
CPm 190	**CP 190**	1.5	2		50	–	–	46	44.5	43	41.5	40	38	36	34.5	32.5	30.5	28	26		
–	**CP 200**	2.2	3		58	–	–	55	54.5	53.5	52	51	49.5	48	46	44.5	42.5	40.5	38.5	36	

Q = Flow rate **H** = Total manometric head **HS** = Suction height

Tolerance of characteristic curves in compliance with EN ISO 9906 App. A.

POS.	COMPONENT	CONSTRUCTION CHARACTERISTICS
1	PUMP BODY	Cast iron, complete with threaded ports in compliance with ISO 228/1
2	BODY BACKPLATE	Stainless steel AISI 304 (cast iron for CP 170-170M-190-200)
3	IMPELLER	Stainless steel AISI 304
4	MOTOR SHAFT	Stainless steel EN 10088-3 - 1.4104

5 MECHANICAL SEAL

Pump	*Seal*	*Shaft*	*Materials*		
Model	*Model*	*Diameter*	*Stationary ring*	*Rotational ring*	*Elastomer*
CP 100-130-132A	**AR-12**	**Ø 12** mm	Ceramic	Graphite	NBR
CP 150-158	**AR-14**	**Ø 14** mm	Ceramic	Graphite	NBR
CP 170-170M-190-200	**FN-18**	**Ø 18** mm	Graphite	Ceramic	NBR

6 BEARINGS

Pump	*Model*
CP 100-130-132A	**6201 ZZ / 6201 ZZ**
CP 150-158	**6203 ZZ / 6203 ZZ**
CP 170-170M	**6204 ZZ / 6204 ZZ**
CP 190-200	**6304 ZZ / 6204 ZZ**

7 CAPACITOR

Pump	*Capacitance*	
Single-phase	*(230 V or 240 V)*	*(110 V)*
CPm 100	**10** µF 450 VL	**25** µF 250 VL
CPm 130	**10** µF 450 VL	**30** µF 250 VL
CPm 132A	**14** µF 450 VL	**30** µF 250 VL
CPm 150-158	**20** µF 450 VL	**60** µF 300 VL
CPm 170-170M	**25** µF 450 VL	**60** µF 250 VL
CPm 190	**45** µF 450 VL	**80** µF 250 VL

8 ELECTRIC MOTOR

CPm: single-phase 230 V - 50 Hz with thermal overload protector built-in to the winding.
CP: three-phase 230/400 V - 50 Hz.

➠ **Pumps fitted with the three-phase motor option offer IE2 (IEC 60034-30) class high performance**

– Insulation: F class.
– Protection: IP 44.

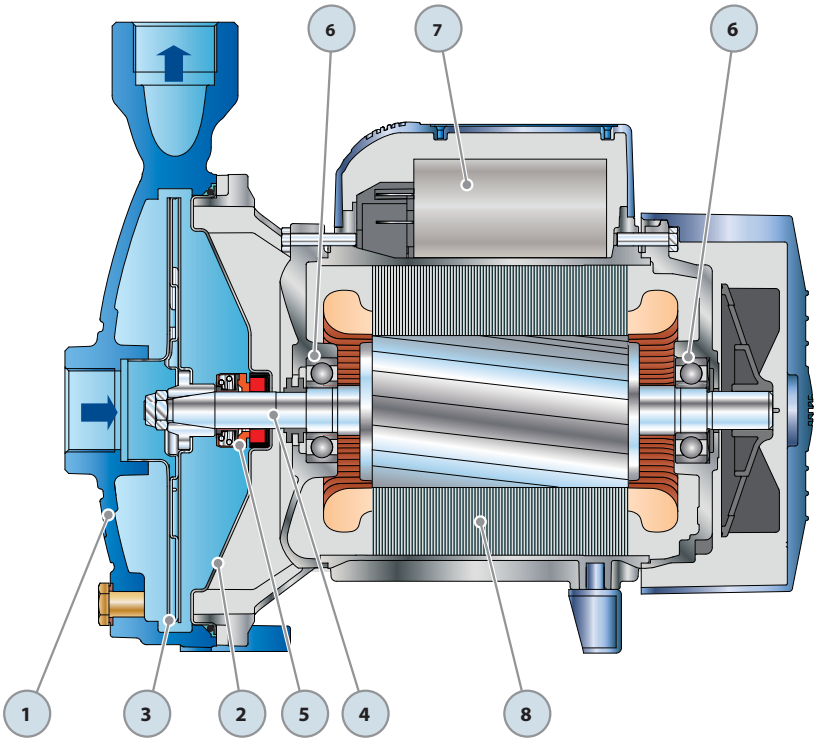

DIMENSIONS AND WEIGHT

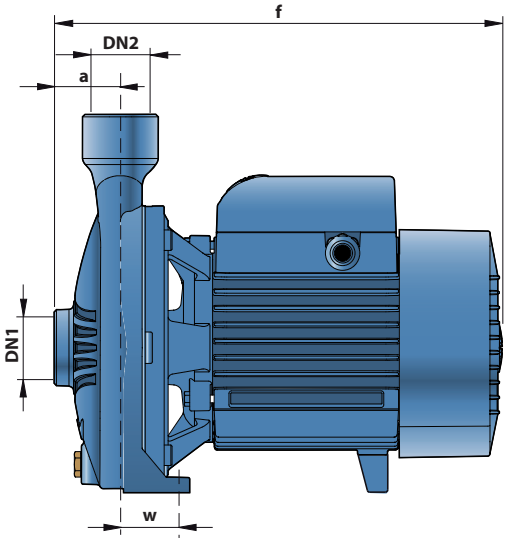

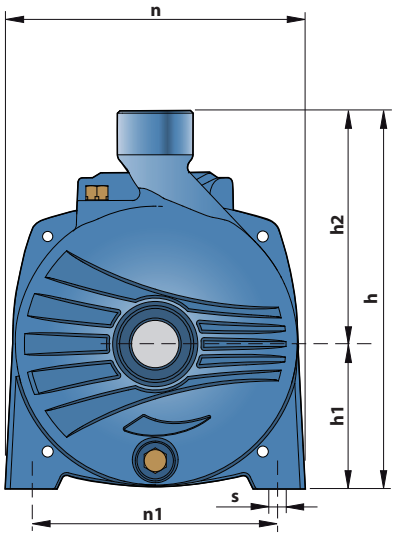

MODEL		PORTS		DIMENSIONS mm									kg	
Single-phase	Three-phase	DN1	DN2	a	f	h	h1	h2	n	n1	w	s	1~	3~
CPm 100	–					192	82	110					**6.9**	**–**
CPm 130	CP 130				259				165	135	41		**7.6**	**7.1**
CPm 132A	CP 132A	**1”**	**1”**	42		205	82	123				10	**8.3**	**8.0**
CPm 150	CP 150												**12.4**	**11.4**
CPm 158	CP 158				285	240	92	148	190	160	38		**12.0**	**11.0**
CPm 170 - 170M	CP 170 - 170M				367	260	110	150	206	165	44.5		**17.8**	**17.2**
CPm 190	CP 190	**1¼”**	**1”**	51	364	290	115	175	242	206	32.5	11	**22.3**	**21.3**
–	CP 200												**–**	**22.5**

ABSORPTION

MODEL	VOLTAGE (single-phase)		
Single-phase	230 V	240 V	110 V
CPm 100	**1.9** A	**1.55** A	**3.3** A
CPm 130	**3.2** A	**2.9** A	**6.4** A
CPm 132A	**3.5** A	**3.2** A	**7.0** A
CPm 150	**5.7** A	**5.4** A	**11.4** A
CPm 158	**6.0** A	**5.8** A	**12.0** A
CPm 170 - 170M	**7.8** A	**7.2** A	**16.0** A
CPm 190	**11.0** A	**10.0** A	**22.0** A

MODEL	VOLTAGE (three-phase)			
Three-phase	230 V	400 V	240 V	415 V
CP 130	**2.0** A	**1.2** A	**1.8** A	**1.1** A
CP 132A	**2.9** A	**1.7** A	**2.4** A	**1.4** A
CP 150	**4.2** A	**2.4** A	**4.1** A	**2.4** A
CP 158	**4.4** A	**2.5** A	**4.3** A	**2.5** A
CP 170 - 170M	**5.2** A	**3.0** A	**5.1** A	**2.9** A
CP 190	**7.5** A	**4.3** A	**7.3** A	**4.2** A
CP 200	**9.0** A	**5.2** A	**8.3** A	**4.8** A

PALLETIZATION
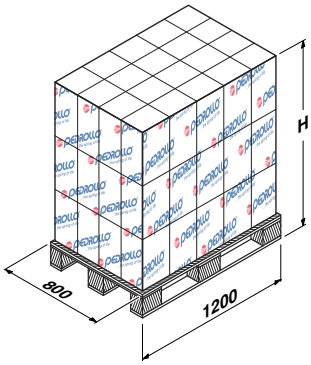
MODEL		GROUPAGE				CONTAINER			
		n°	H	kg		n°	H	kg	
Single-phase	Three-phase	pumps	(mm)	1~	3~	pumps	(mm)	1~	3~
CPm 100	–	**105**	1280	741	–	**189**	2190	1321	–
CPm 130	CP 130	**105**	1280	820	770	**189**	2190	1460	1360
CPm 132A	CP 132A	**105**	1280	890	860	**189**	2190	1590	1530
CPm 150	CP 150	**70**	1450	890	820	**112**	2240	1410	1300
CPm 158	CP 158	**70**	1450	860	790	**112**	2240	1360	1250
CPm 170	CP 170	**50**	1560	900	870	**70**	2120	1250	1200
CPm 170M	CP 170M	**50**	1560	940	910	**70**	2120	1310	1260
CPm 190	CP 190	**36**	1410	820	790	**54**	2040	1220	1170
–	CP 200	**36**	1410	–	830	**54**	2040	–	1240