DIEMATIC VM iSystem

WALL-MOUNTED CONTROL SYSTEM

Electronic control system capable of controlling 2 heating circuits, a DHW circuit and an auxiliary circuit

EC identification No.:
0085CM0178

Electronic microprocessor control system in the form of a wall-mounted box. It can manage and control 2 hydraulic circuits, a DHW circuit and an auxiliary circuit and can operate according to 3 configurations:
- Alone;
- As part of a network with other DIEMATIC VM iSystem control systems;
- With or without primary loop control.

It can also communicate with a boiler via the OpenTherm or Modbus protocols.
The very advanced control panel with new ergonomics allows problem-free programming and consultation of all installation parameters, using menu-driven navigation. Numerous options such as temperature sensors (outside sensor, DHW sensor, sensor downstream of the valve, storage tank sensor), interactive remote controls with room temperature sensor, (wire- or wireless-controlled), a vocal remote monitoring module, are also available.

Dimensions

Length: 320 mm
Height: 260 mm
Depth: 130 mm

Power supply

230 V, 50 Hz, 6 A

Protection rating

IP 21

De Dietrich

PRESENTATION OF THE DIEMATIC VM iSYSTEM CONTROL SYSTEM

The DIEMATIC VM iSystem control system comes in the form of a compact wall-mounted box (L 320 mm, H 260 mm, D 130 mm) with low voltage (230 V) and very low voltage (< 24 V) electrical connection zones.
The waterproof ABS box (IP 21) is fitted with a transparent polycarbonate flap, which can be locked (using a screwdriver), that allows the readout of various parameters on the display unit. This box can be mounted on the wall (drilling template attached), on the front of a control cabinet or integrated inside the cabinet. The electrical connections are made from underneath (the holes for the wires are pushed out and the cable glands are provided).

The DIEMATIC VM iSystem control system is delivered without sensors and must therefore be completed with the appropriate accessories for the type of installation concerned (see page 11).
As standard, the DIEMATIC VM iSystem control system can be used to control two hydraulic circuits, a DHW circuit and an auxiliary circuit.
Depending on the user's preferences, each of the 2 hydraulic circuits can be used as:
- A heating circuit fitted with a motorised 3-way valve;
- A direct heating circuit;
- A swimming pool circuit.

SCENARIOS IN WHICH DIEMATIC VM iSystem CAN BE USED VM

The DIEMATIC VM iSystem control system can operate:
- **Fully autonomously** (**see page 3**)
- **By communicating with other generators** (**cascade**) **via the Modbus or OpenTherm protocols** (**see page 5**)

The DIEMATIC VM iSystem control system can be used alone (autonomous) or as part of a network (several VM iSystem control systems interconnected by a bus). It is compatible with DIEMATIC 3, m3 and iSystem control systems and can also be used with any kind of generator equipped with an OpenTherm interface or an ON/OFF (0/1) control.
Each DIEMATIC VM iSystem control system has to be configured according to:
- The type of installation to be created (number and type of generators, number and type of circuits to be managed);
- The type of existing installation as part of an extension (number and type of generators and control systems, number and type of circuits to be added).

The choice of configuration mode is made in the «installer» navigation menu before commissioning the installation.

Each DIEMATIC VM iSystem control system can manage up to 2 circuits with 3-way valve, a DHW circuit and can be fitted with 2 remote controls. It also has an AUX outlet that can be used to:
- Control the load pump on a second DHW circuit;
- Control the DHW loop pump;
- Control a primary pump (connected to the VM);
- Be used as an alarm transfer;
- Be used as an ON/OFF control.

DIEMATIC VM iSystem AUTONOMOUS CONTROL SYSTEM(S)

The DIEMATIC VM iSystem control system can be used for the autonomous control:
- Of additional secondary circuits as part of an installation extension;
- Of a boiler with the AUX outlet for ON/OFF (0/1) control;
- Of secondary circuits as part of a sub-station.

In all cases, it should be fitted with an outside sensor (package FM 46). It is possible to interconnect up to 20 DIEMATIC VM iSystem control systems by means of a BUS cable. Each of the control systems can be equipped with 2 remote controls.

Application scenario	Principle
• No management of the primary circuit • Management of a boiler with the AUX outlet for 0/1 control possible • Management of 2 circuits: direct or with mixing valve (circuits B and C) and **1 DHW circuit** • Requires an outside sensor • Up to 2 remote controls per control system	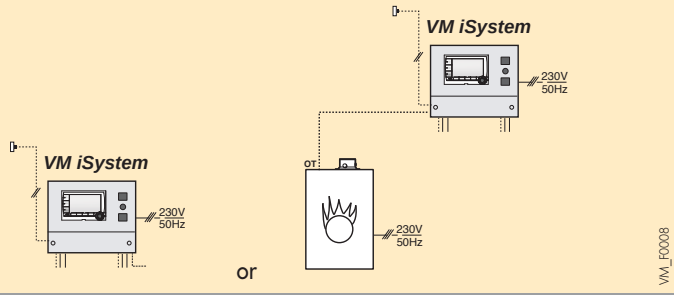

Operating principle

The DIEMATIC VM iSystem control system manages 1 underfloor heating circuit according to the outside temperature, a low temperature circuit and DHW production.

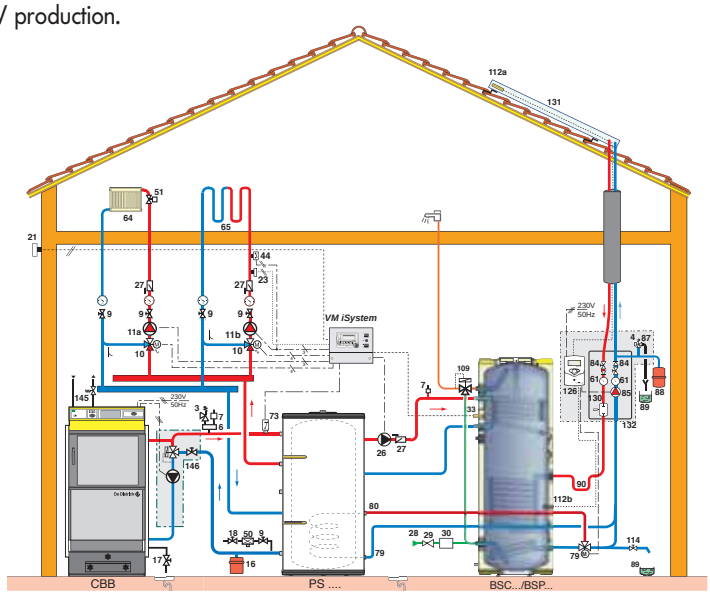

Operating principle

The DIEMATIC VM iSystem control system manages the boiler, via the 0/1 control, according to demand. It also manages the 2 heating circuits and the DHW circuit.

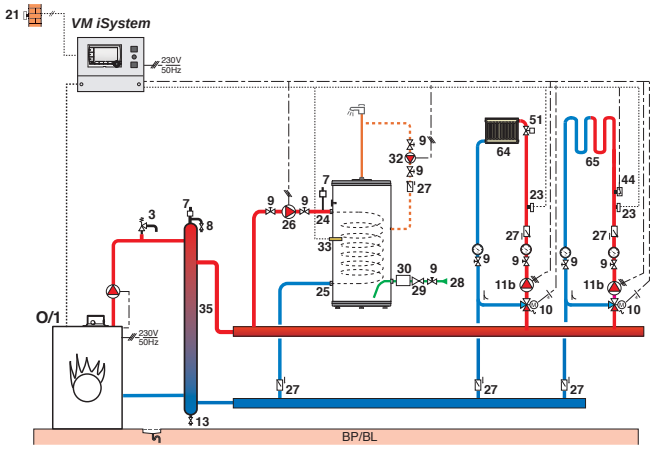

DIEMATIC VM iSystem AUTONOMOUS CONTROL SYSTEM(S) (CONTD)

Operating principle

The DIEMATIC VM iSystem control system is used as part of a sub-station. It manages the 2 circuits connected according to the outside temperature in a totally independent manner.

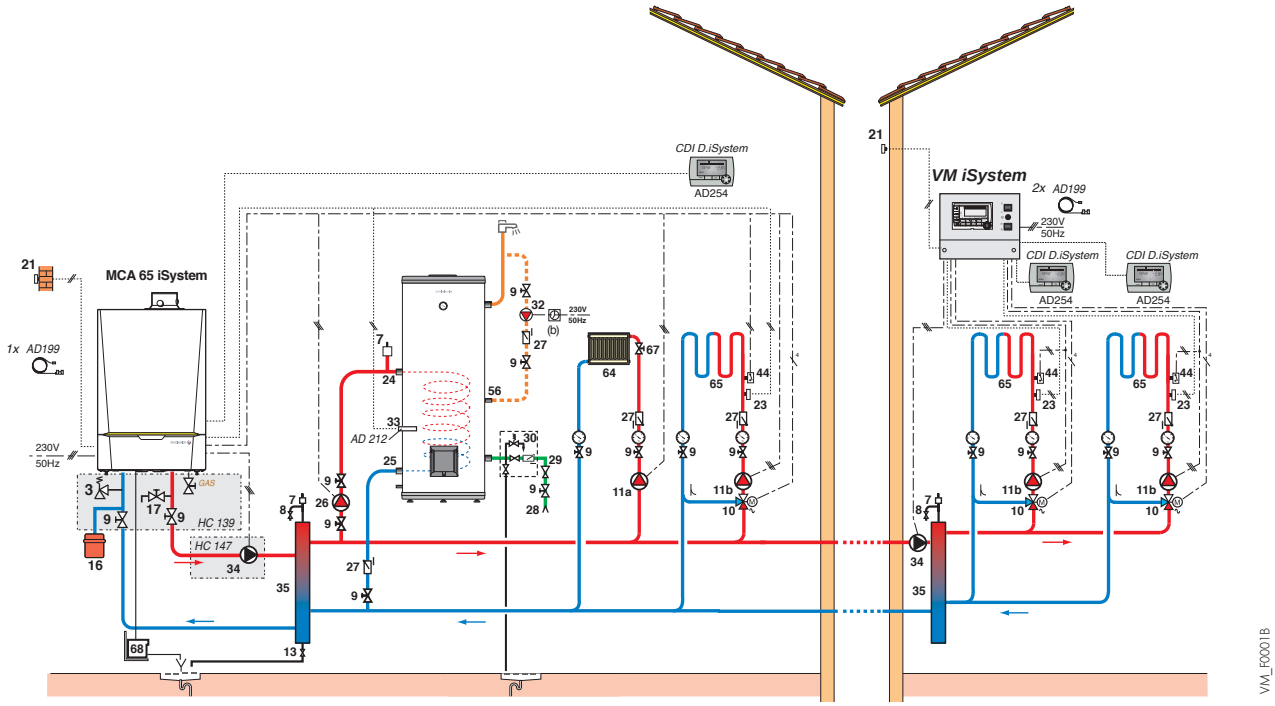

DIEMATIC VM iSystem CONTROL SYSTEMS COMMUNICATING WITH GENERATORS

The DIEMATIC VM iSystem control system can communicate with:
- A boiler or a cascade of boilers equipped with a DIEMATIC 3, m3 or iSystem control system via the Modbus protocol.
- A generator or a cascade of generators equipped with an OpenTherm (OT) interface.

Communication with boilers equipped with DIEMATIC 3, m3, iSystem control system (see page 5)

The DIEMATIC VM iSystem control system can be linked to a boiler equipped with a DIEMATIC 3, m3 or iSystem control panel via a BUS cable.
In a cascade of generators equipped with DIEMATIC 3, m3 or iSystem, the DIEMATIC VM iSystem control system is under the control of the master generator. Depending on the configuration of the installation, it is possible to interconnect up to 20 DIEMATIC VM iSystem control systems by means of a BUS cable.

Communication with boilers equipped with an OpenTherm connection (see page 6)

The DIEMATIC VM iSystem control system can be connected to a generator equipped with the OT (OpenTherm) interface to manage it according to needs and the outside temperature.
When it is used as part of a cascade, each of the boilers should be equipped with an interface (package AD 286 or AD 287) available as an option.

DIEMATIC VM iSystem CONTROL SYSTEMS COMMUNICATING WITH GENERATORS (CONTD)

➪ **DIEMATIC VM iSystem alone or as part of a network in a cascade of boilers with DIEMATIC 3, m3 or iSystem control system**

Application scenario	Principle
• Management of 2 circuits: direct or with mixing valve (circuits B and C) and 1 DHW circuit • Optional outside sensor • Networking of 1 to 20 DIEMATIC VM iSystem control systems with 1 to 10 generators equipped with a DIEMATIC • AUX outlet • Up to 2 remote controls per control system	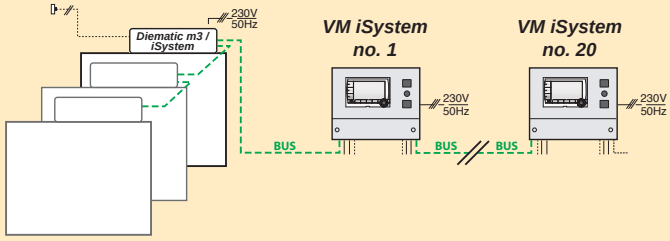

Operating principle

The DIEMATIC iSystem control system on the master boiler manages the DIEMATIC VM iSystem control system(s) via the BUS connection. The DIEMATIC VM iSystem control systems used in the installation are linked to each other by a BUS cable and each of them can manage 2 heating circuits with 3-way valve and a DHW circuit (in the second part of the example, the control system manages a swimming pool and a DHW tank).

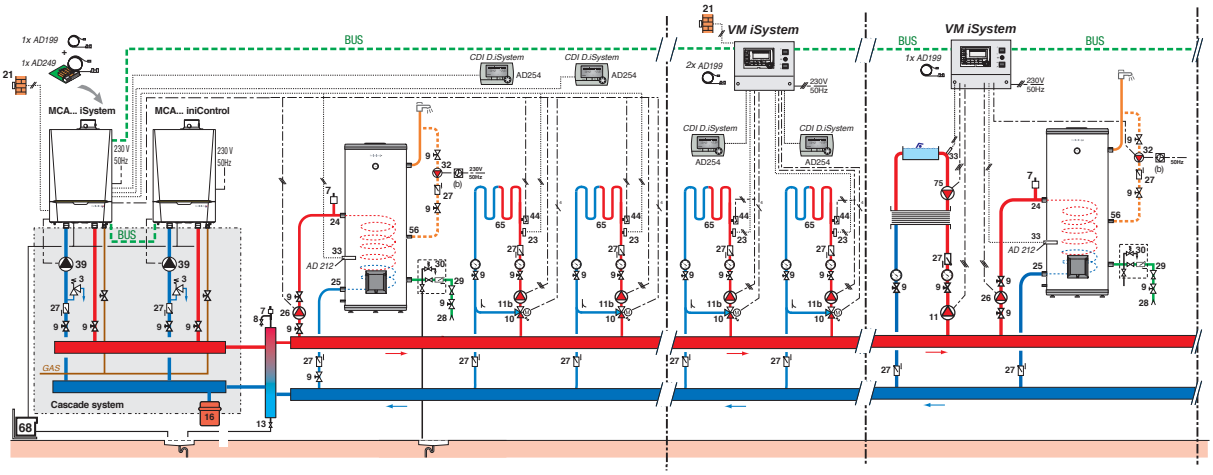

Operating principle

The DIEMATIC m3 control panel on the master boiler manages the DIEMATIC VM iSystem control system via a BUS cable. The latter manages 2 heating circuits with 3-way valve.

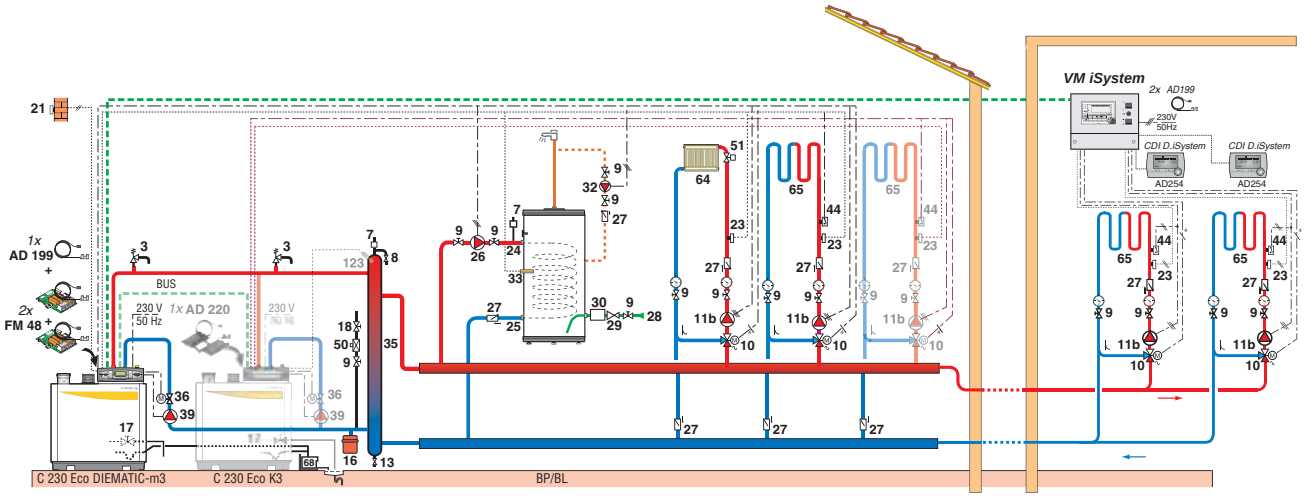

DIEMATIC VM iSystem CONTROL SYSTEMS COMMUNICATING WITH GENERATORS (CONTD)

➪ **DIEMATIC VM iSystem alone or as part of a network with a single boiler or a cascade of boilers equipped with an OpenTherm (OT) interface**

Application scenario	Principle
• Management of the boiler on ON/OFF or OT according to the outside temperature • Management of 2 circuits: direct or with mixing valve (circuits B and C) and 1 DHW circuit • Outside sensor required • Networking of 1 to 20 OpenTherm VM iSystem control systems with 1 to 10 generators equipped with OpenTherm • AUX outlet • Up to 2 remote controls per control system	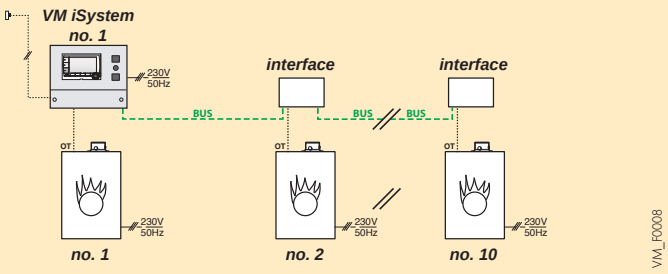

Operating principle

A network with 2 DIEMATIC VM iSystem control systems is managed in a cascade of boilers, each equipped with an OpenTherm (OT) interface. The first DIEMATIC VM iSystem control system manages the first boiler, a DHW circuit and 2 heating circuits with a 3-way valve. The second control system manages the other boilers through the AD 286 connection interface and 2 heating circuits with 3-way valve.

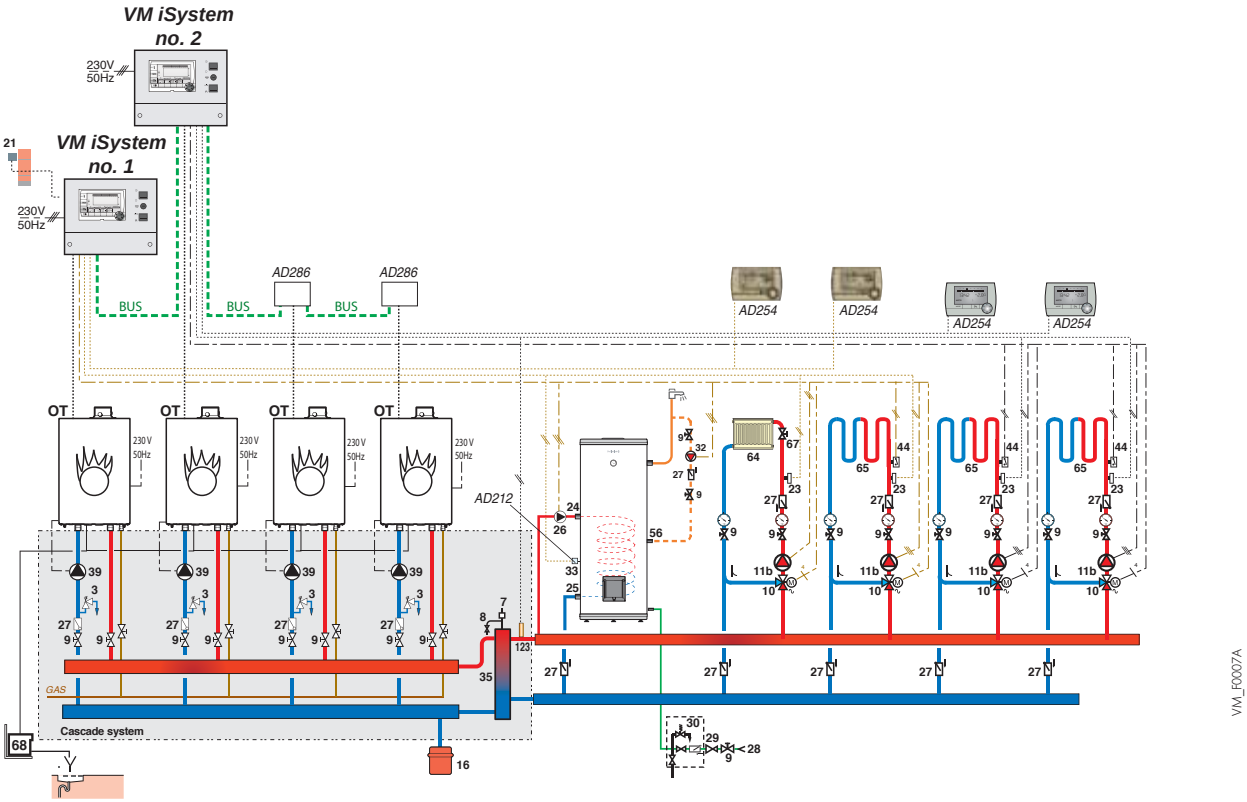

TECHNICAL SPECIFICATIONS

Information exchanged between DIEMATIC VM iSystem control systems

➪ Between interconnected DIEMATIC VM iSystem

The information exchanged between interconnected DIEMATIC VM iSystem control systems is:

- The outside temperature: a single sensor may be sufficient for all of the control systems;
- The date and time data.

➪ Between DIEMATIC VM iSystem and DIEMATIC…, DIEMATIC iSystem control panels

In addition to the parameters above, the actual thermal needs are communicated at all times to the control system on the primary loop (DIEMATIC… control panel).

➪ Network

A network can include up to 20 DIEMATIC VM iSystem control systems and, in this case, command up to 40 hydraulic circuits (heating circuits by motorised 3-way valve, direct circuits, primary circuits for DHW preparation, auxiliary circuits).

Installation of DIEMATIC VM iSystem control systems

All interconnected control systems must be installed in the same building. Should this not be the case, the following special provisions must be made:

Length of the BUS

The length of the BUS must not exceed 1200 m.

Type of cable

The connection of DIEMATIC VM iSystem control systems must be made with AD 123, AD 124 and DB 119 connecting cables available as options.

Fitting the cable

If the connecting cable is installed in a pipe or cable way without electrical continuity, it will be necessary to affix the connecting cable to a copper cable with a minimum cross-section of 16 mm^2 connected to the earth at both ends.

Equipotentiality of the earth terminals

The earth terminals in the building must be interconnected for reasons of electrical safety and compliance with regulations.

Surge suppressor

It will be necessary to equip the connecting cable with an RS 485 line lightning conductor at each point of exit from the building.
It will be necessary to equip the electrical power supply on each control system with a mains lightning conductor. If a telephone transmitter is used, it will be necessary to equip it with a mains lightning conductor and a lightning conductor for the telephone line.

TECHNICAL SPECIFICATIONS

The DIEMATIC VM iSystem control system module is particularly easy to use. Particularly owing to its large conversational display unit, backlight, it establishes a dialogue with the user by means of drop-down menus to guide him in the choice of readouts or settings that he wishes to make. Navigation between the drop-down menus is quite straightforward thanks to a rotary button. The display unit converses in plain text and, at all times, provides information on the time, the day, the various temperatures in the installation, the outside air temperature and the status of the various components in the installation (valves, pumps, etc.). For the sake of simplification, the display unit is able to recognise which circuits are actually connected and ignore those not in use.

The display unit enables 3 levels of navigation:
- A user level: accessible to the end user who can modify certain parameters regarding the temperatures in the various operating modes and the programming for the various comfort periods…
- An installer level: accessible only to the installer.
The latter can use this to set the configuration of the various parameters of the installation.
- An After Sales Service level: accessible only to the installer.

Pre-programmed and set (date, day, time) in the factory, DIEMATIC VM iSystem comes ready to operate. Four different weekly programmes are memorised. Each programme can be selected directly from a drop-down menu. If, out of these 4 options, none is suitable, 4. programme can be very easily customised according to the user's wishes.

Presentation of the DIEMATIC iSystem control panel

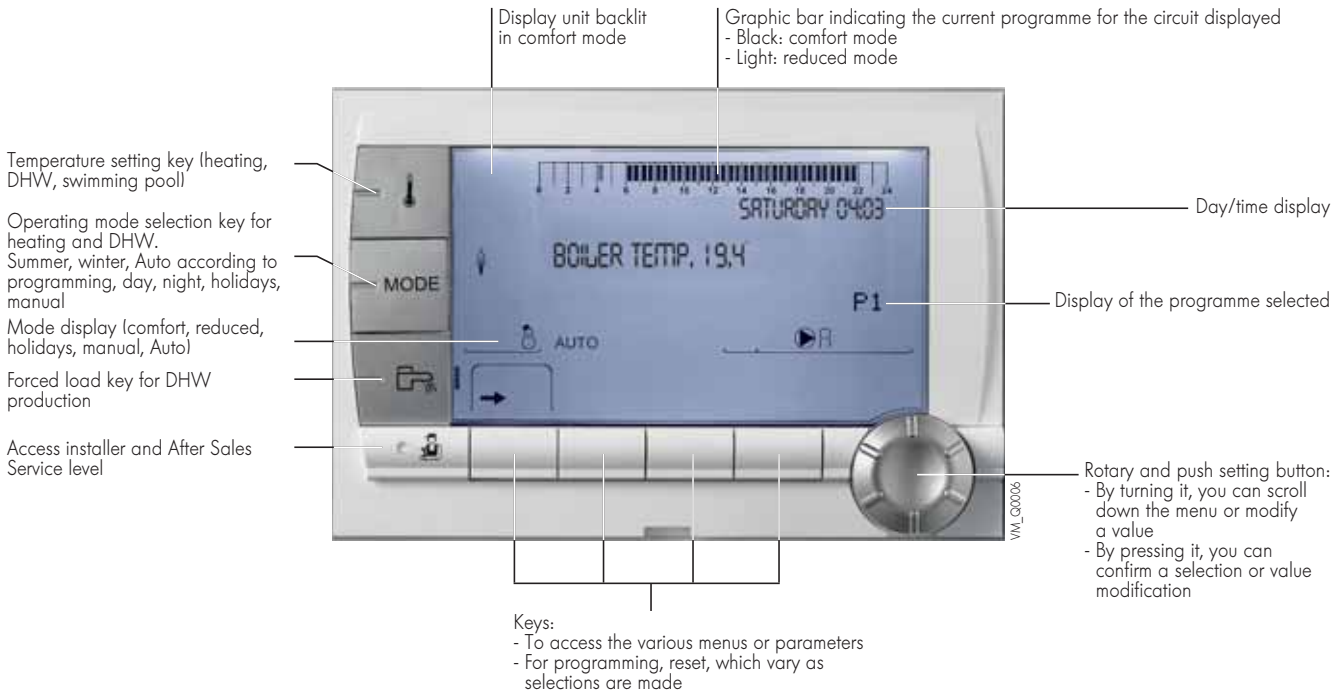

TECHNICAL SPECIFICATIONS

Operating principle

The DIEMATIC VM iSystem control system manages up to 2 hydraulic circuits (circuit with motorised 3-way valve, direct circuit) and an auxiliary circuit by activating the pumps and, where applicable, the mixing valve(s). Connection of a room temperature sensor enables the auto-adaptability of the heating curve and correction of the room temperature on each circuit.

The control system includes:
- Automatic summer/winter switching (setting balance point with anti-clogging function on the pumps; optional forced summer mode with this function.
- An «installation antifreeze» function activated regardless of the operating mode.
- «Anti-legionella» protection for the domestic hot water circuit(s).

Heating programming

The DIEMATIC VM iSystem control system comes with 4 memorised programmes. For each circuit connected to the control system, one of these programmes can be applied. Programme selection is easily done with a menu.
Programme P1 is activated on start-up. Programme P2 to P4 can be customised differently for each of the circuits connected. Programming can be done day by day or in blocks of 7 days, and in 30-minute intervals, i.e. up to 48 periods per day per circuit.
It is possible to go back to the standard programmes present on first start-up at any time.

Below are the programming details for heating «comfort» mode in the various programmes:
P1: 6 h to 22 h every day
P2: 4 h to 21 h every day (e.g.: underfloor heating)
P3: 5 h to 8 h and 16 h to 22 h from Monday to Friday, 7 h to 23 h on Saturday and Sunday
P4: 6 h to 8 h then 11 h to 13.30 h then 16 h to 2 h from Monday to Friday, 6 h to 23 h on Saturday and 7 h to 23 h on Sunday

Clock power reserve

The clock power reserve is 2 years. After 2 years without current, only the time on the clock has to be corrected. All other values, including the programming, are saved in the memory.

Display of measurements

Depending on the various options, circuits and corresponding sensors actually connected, the values measured by the control system can be displayed in the «MEASUREMENTS» menu:
- Outside temperature
- Room temperature on circuits B and C
- Water temperature in the DHW tank
- Water temperature in the storage tank
- Water temperature in the swimming pool on circuits B and C
- Water flow temperature on circuits B and C
- Water temperature system flow if multi-generator
- Temperature of the hot water produced by solar power

Troubleshooting

The DIEMATIC VM iSystem control system has a test programme that can be used:
- To check the correct operation of all components in the installation (remote control, valve(s), pump(s), etc.);
- To read the set point values calculated by the system and factored into operation of the installation;
- To display the status of the logic inputs (other than the sensors);
- To test the interconnections and configurations.

Alarms

In the event of malfunction, the module flashes and displays an error message and a corresponding code. They are recorded in a historic.

TECHNICAL SPECIFICATIONS

Electrical connections

All connections are grouped in the lower section of the box in a zone designed for this purpose. The cables are inserted into the box through various push-out inlets (cable glands provided).
The electrical connections are made to clearly marked terminal boxes.

Important
The maximum current that can be switched per outlet is 2Acosφ = 0.7 (≃450 W or 0.5 HP mechanical motor).
The inrush current must be lower than 16 A. The sensor wires (very low voltage) and those carrying 230 V must be placed in different cable ways. In all cases, a minimum spacing of 10 cm must be observed.

BUS connection, interconnections between modules or DIEMATIC 3, m3, iSystem

Very low voltage connections, sensors, logic inputs

Low voltage connections (230 V), power supply, pumps, 3-way valves, safety contacts

➪ BUS connections

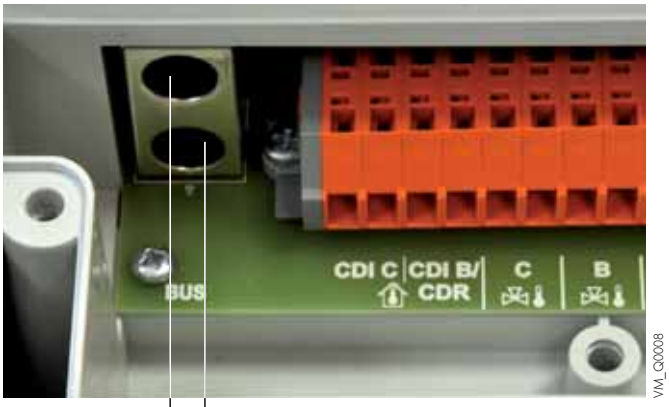

The BUS cable(s) (packages AD 134, AD 124 and DB 119) should be connected to one of the 2 bed plates marked BUS.
Connection is simply done by plugging in the mini-DIN connector on the connecting cable.

Below, a representation of the connection terminal box:

➪ Very low voltage connections (sensors, remote controls)

Pictogram	Description
CDI C	Remote control – circuit C
CDI B/C CDR	Remote control – circuit B Radio remote control - circuits B and C
C	Flow sensor on circuit C
B	Flow sensor on circuit B
S.SYST	System sensor
BF	DHW sensor
AF	Outside temperature sensor
0-10 V / E.TEL	Remote vocal monitoring module
OT	OpenTherm

➪ Low voltage connections: outlet connection (heating pumps, 3-way valves, etc.)

Pictogram	Description
C	Heating pump - circuit C
CS*	Safety contact – circuit C
C	3-way valve – circuit C
B	Heating pump - circuit B
CS*	Safety contact – circuit B
B	3-way valve – circuit B
	DHW load pump
AUX	DHW loop pump, burner, HP, wood-fired boiler… (depending on configuration)
ALIM 230 V/50 Hz	Electrical power supply

*** The safety contacts (CS):**
These have several functions:
- A safety contact function, e.g. flow limiters underfloor heating, etc.
- A control function: the bridges can be removed and replaced by pump cut-off switches;

CONTROL PANEL DIEMATIC VM iSYSTEM OPTIONS

DIEMATIC iSystem CONTROL PANEL OPTIONS

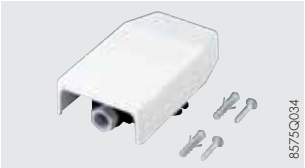

Outside temperature sensor - Package FM 46

Connected to the control panel, it is used to regulate the heating depending on the outside temperature.

Domestic hot water sensor - Package AD 212

This is used for regulating the DHW temperature as a priority and programming of domestic hot water production with an independent calorifier. (The TA connector in package is not to be used).

Outlet sensor downstream of the valve - Package AD 199

This sensor is required to connect a circuit with mixing valve.

CDI D. iSystem interactive remote control - Package AD 254
CDR D. iSystem interactive "radio" remote control (**without transmitter** / **receiver radio**) **-** Package AD 253
Radio boiler module DIEMATIC iSystem (**transmitter** / **receiver**) **-** Package AD 252

These are used to change heating parameters from the DIEMATIC iSystem control panel from the room in which they are installed. In addition, they enable the self-adaptability of the heating regime for the circuit concerned (one CDI D.iSystem or CDR D.iSystem per circuit).

In the case of the CDR D.iSystem, the data are transmitted by radio waves from the place where the CDR D.iSystem is installed to the transmitter/ receiver box (package AD 252) placed close to the boiler.

Simplified remote control with room sensor - Package FM 52

This is used from the room in which it is installed to change the set point from the DIEMATIC iSystem panel:

- It allows a +2,5/-2,5 deviation of the room T° set point. It is also used to enable the self-adaptability of the heating curve for the circuit concerned (1 remote control per circuit).

BUS connection cable (**length 12 m**) **-** Package AD 134

The BUS cable is used to make the connection between 2 boilers fitted with the DIEMATIC iSystem control panel in a cascade installation, as well as the connection of a DIEMATIC VM control unit or a telemonitoring network transmitter.

Sensor for storage tank - Package AD 250

Includes 1 sensor for a storage tank with a boiler fitted with a DIEMATIC iSystem control panel.

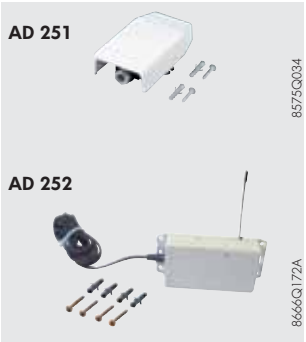

Radio outside temperature sensor - Package AD 251
Boiler radio module (radio transmitter) **-** Package AD 252

The radio outside temperature sensor can be delivered as optional equipment for systems in which the installation of the external wire connection sensor delivered with DIEMATIC iSystem control panel would be too complex.

If this sensor is used:
- With a wire connection remote control (AD 254 or FM 52), it is necessary to order the "Boiler radio module" (AD 252).
- With a radio remote control (AD 253), already combined with a "boiler radio module" (AD 252), control of a second module is not necessary.

CONTROL PANEL DIEMATIC VM iSYSTEM OPTIONS

Wall-mounted box OpenTherm/Modbus Interface - Package AD 286

Needed to control a boiler cascade equiped with OT controller (1 board per boiler).

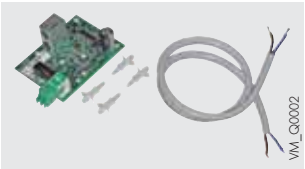

OpenTherm/Modbus Interface - Package AD 287

Needed to manage a cascade of boilers equiped with OT controller.
The board should be installed directly in the boiler.

Intermodule connecting cable - length 1.5 m - Package AD 124

This is used for the interconnection of two DIEMATIC VM iSystem wall-mounted control systems.

BUS connecting cable - long. 40 m - Package DB 119

This is intended to replace either the 12 m or the 1 m BUS cable when these turn out to be too short.

Legend

- **3** Safety valve 3 bar
- **4** Pressure gauge
- **6** Air separator
- **7** Automatic air vent
- **8** Manual air vent
- **9** Isolation valve
- **10** 3-way mixing valve
- **11** Electronic heating pump
- **11a** Electronic heating pump for direct circuit
- **11b** Electronic heating pump for circuit with mixing valve
- **13** Flush valve
- **16** Expansion tank (except MCA 35)
- **17** Draining valve
- **18** Heat circuit filling
- **21** Outside sensor
- **23** Outlet temperature sensor after mixing valve
- **24** Primary inlet on the DHW tank exchanger
- **25** Primary outlet on the DHW tank exchanger
- **26** Domestic water load pump
- **27** Non-return valve
- **28** Domestic cold water inlet
- **29** Pressure reducer
- **30** Sealed safety device calibrated to 7 bars (1)
- **32** (Optional) DHW loop pump
- **33** DHW temperature sensor
- **35** Disconnecting cylinder (available as an option - see page 8)
- **36** Motorised isolating valve
- **39** Injection pump
- **44** 65°C limiter thermostat with manual reset for underfloor heating
- **46** 3 way-directional valve with motor reversing
- **50** Disconnector
- **51** Thermostat valve
- **61** Thermometer
- **64** Radiator circuit (gentle heat radiators, for example)
- **65** Low temperature circuit (underfloor heating, for example)
- **67** Manual valve
- **68** Condensates neutralisation system
- **73** Limiter thermostat
- **75** Pump for sanitary use
- **79** Primary outlet of the solar exchanger
- **80** Primary inlet of solar exchanger
- **84** Stop valve with releasnon return valve
- **85** Solar circuit pump
- **87** Safety valve sealed and calibrated to 6 bars
- **88** Solar expansion tank
- **89** Recepient for heat transfer fluid
- **109** Thermostatic mixing valve for domestic hot water
- **112a** Collector sensor
- **112b** Solar tank sensor
- **114** Solar circuit drainage valve (note: propyleneglycol)
- **123** Cascade flow sensor (to connect to the slave boiler)
- **126** Solar regulator
- **130** Degasser with manual purge (Airstop)
- **131** Champs de capteurs
- **132** Station solaire complète avec régulation DIEMASOL
- **145** Vanne de commande de la batterie de sécurité
- **146** Module thermostatique de réglage de la température du circuit retour

(1) mandatory, in compliance with safety directives

01/2012 – 300028142 – 347.555.559 Strasbourg Companies Register – Document not contractually binding - Printed in France - OTT Imprimeurs 67310 Wasselonne - 1113899

DE DIETRICH THERMIQUE
S.A.S. with corporate capital of 22 487 610 €
57, rue de la Gare - F - 67580 Mertzwiller
Tel. +33 3 88 80 27 00 - Fax +33 3 88 80 27 99
www.dedietrich-heating.com

De Dietrich