ENGINEERING
TOMORROW

Installation Guide

ECL Comfort 296
(code no. 087H3000, 230 V a.c.)

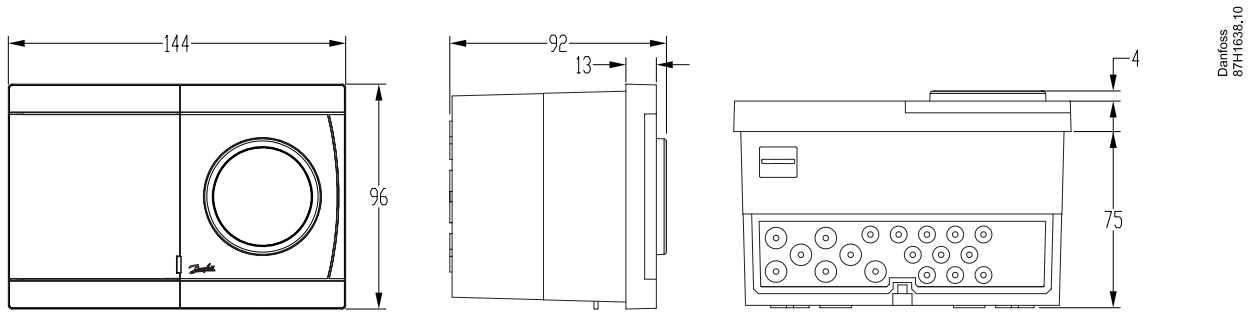

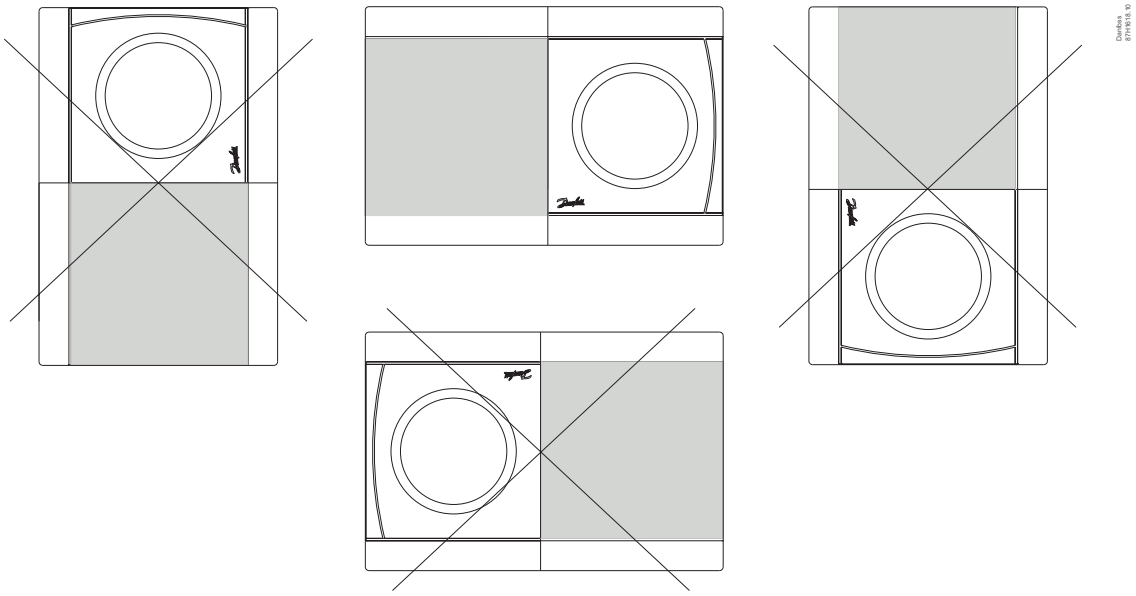

? http://heating.danfoss.com Documentation

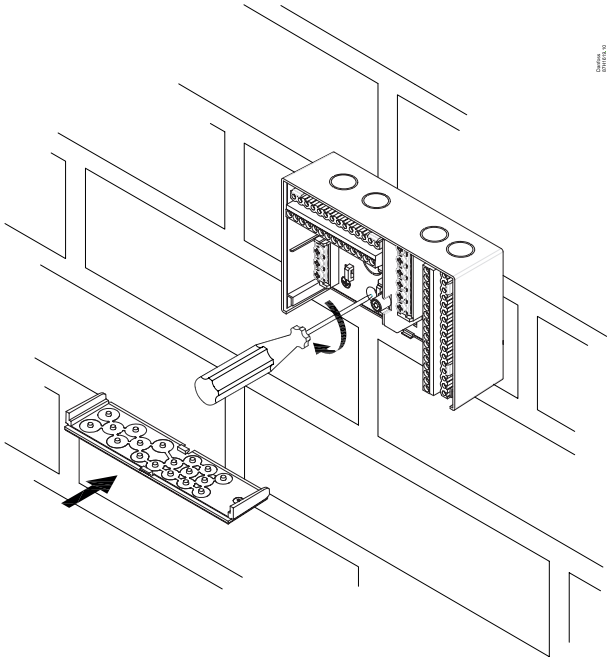

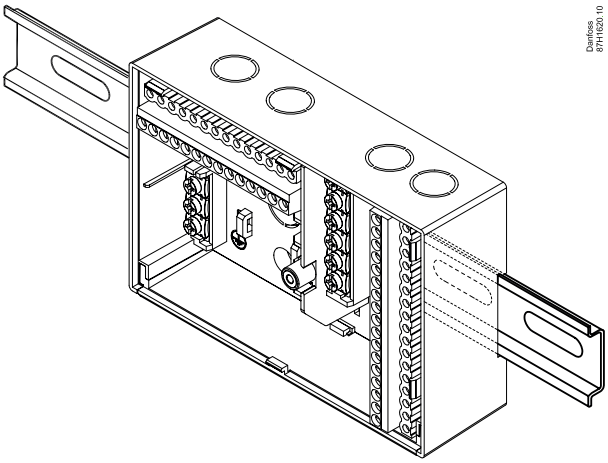

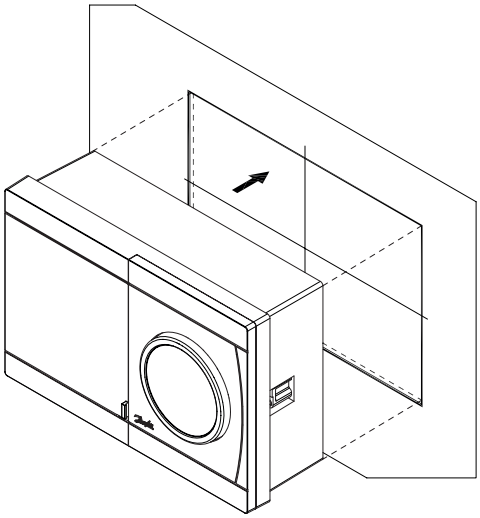

138 x 92 mm

IEC 61554

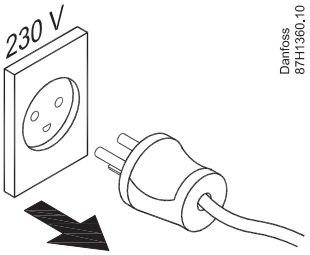

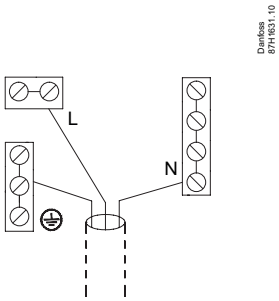

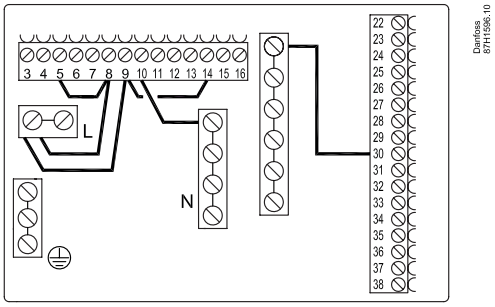

ECL Comfort 296
230 V a.c.

R R	4 (2) A / 230 V a.c.
Tr	0,2 A / 230 V a.c.

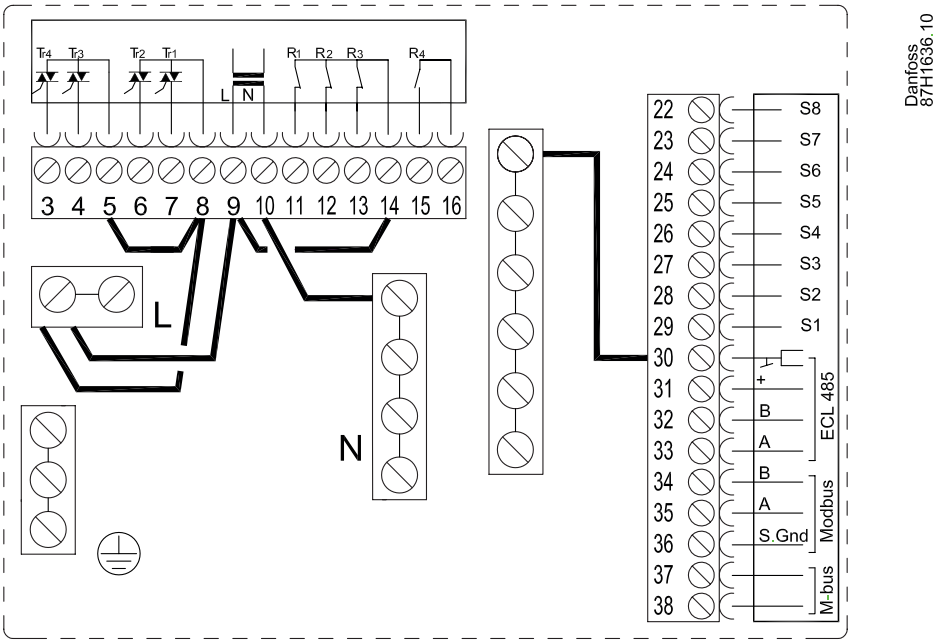

© Danfoss | 2018.05 | 3

230 V a.c.

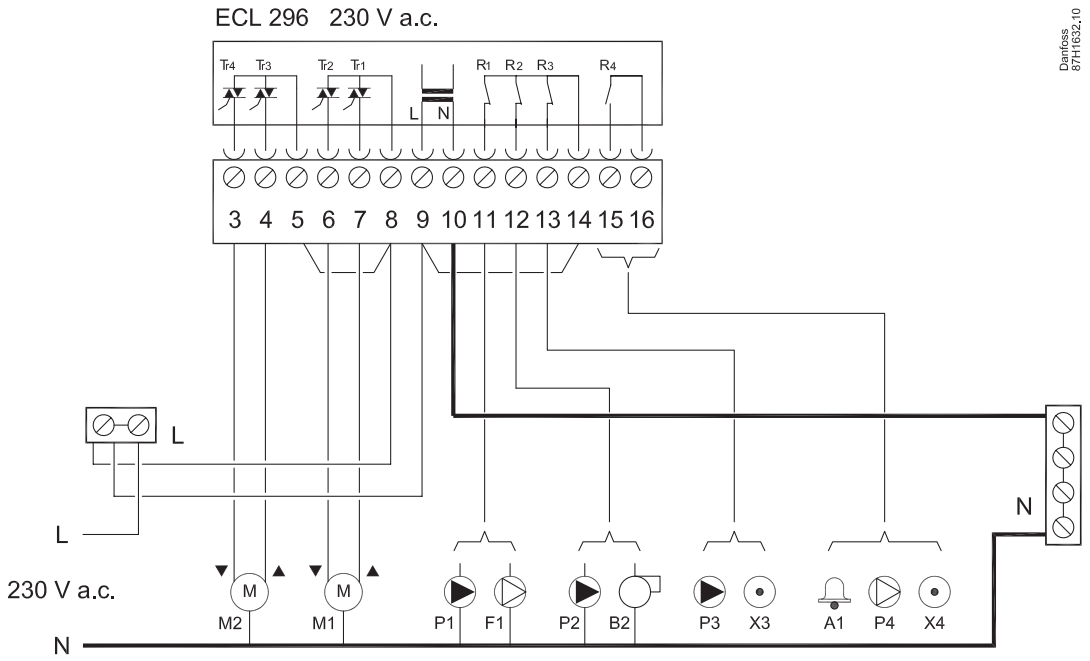

	R1	R2	R3	R4
A207.1	P1		X3	X4
A214.1	F1	P2	X3	A1
A214.2	F1	P2	X3	A1
A214.3	F1	P2	X3	A1
A214.4	F1	P2	X3	A1
A214.5	F1	P2	X3	A1
A214.6	F1	P2	X3	A1
A217.1	P1			A1
A217.2	P1	P2	P3	A1
A217.3	P1			A1
A230.1	P1	P2		A1
A230.2	P1	P2	P3	
A237.1	P1	P2	P3	A1
A237.2	P1	P2	P3	P4
A247.1	P1	P2	P3	A1
A247.2	P1	P2	P3	P4
A247.3	P1	P2	P3	P4
A260.1	P1	P2		A1
A266.1	P1	P2		A1
A266.2	P1	P2		A1
A266.9	P1	P2		A1
A266.10	P1	P2		A1
A267.1	P1	P2	P3	P4
A275.1	P1	B1		A1
A275.2	P1	B1	P3	A1
A275.3	P1	B1	P3	P4

230 V a.c., safety thermostat

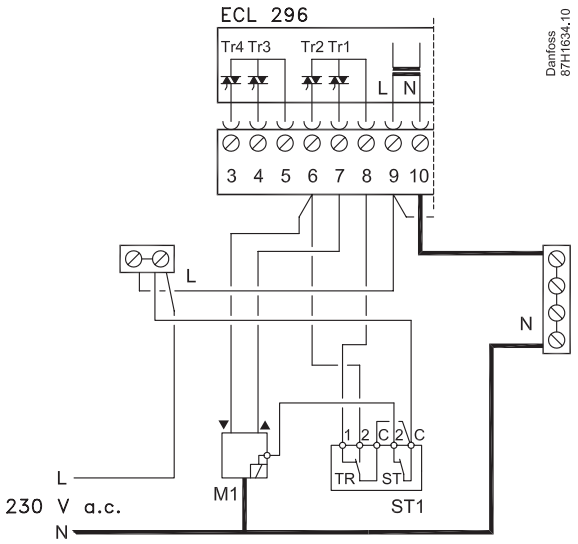

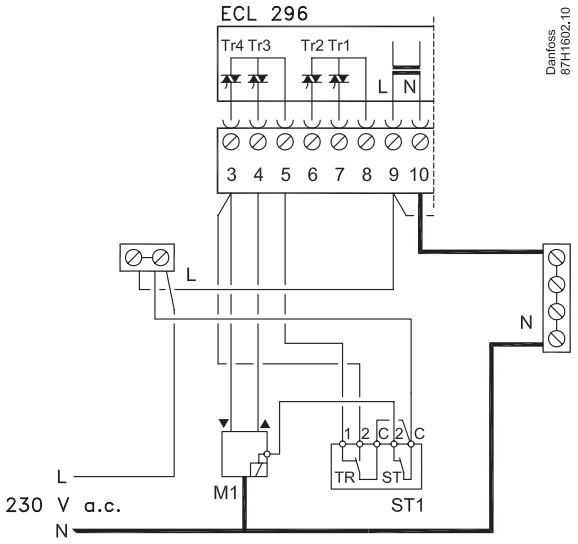

A266, ex.

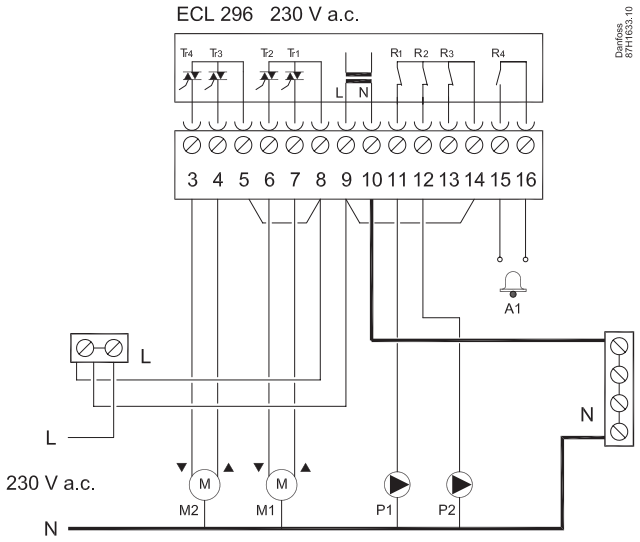

Danfoss Thermo-actuator ABV

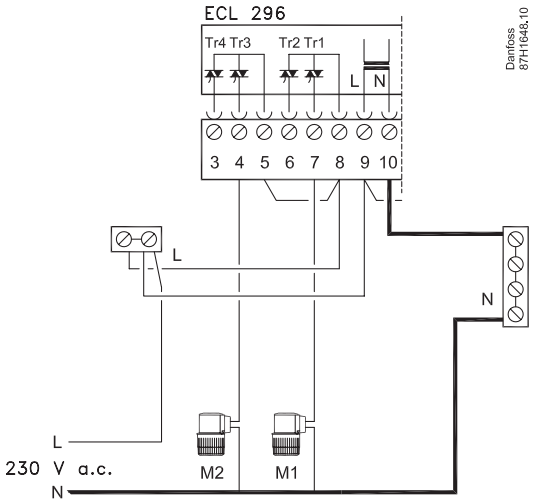

Pt 1000 (1000 Ω / 0 °C)

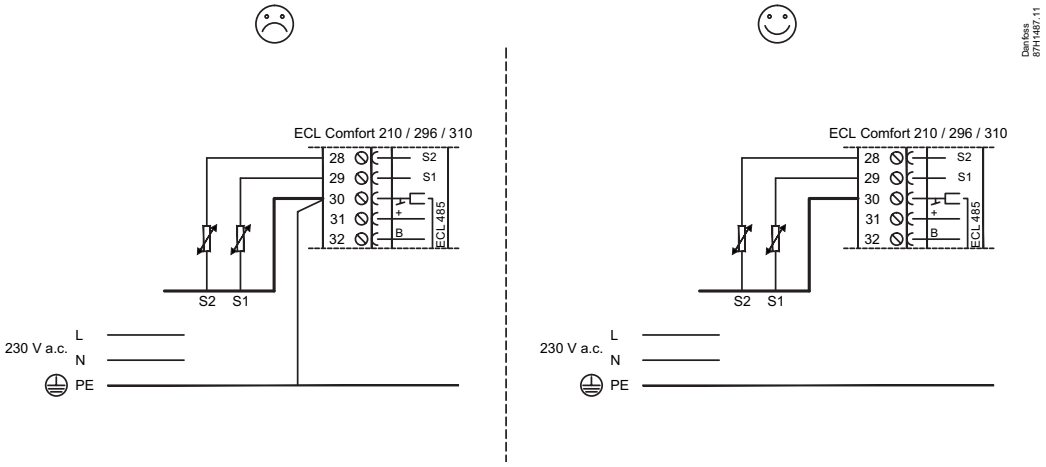

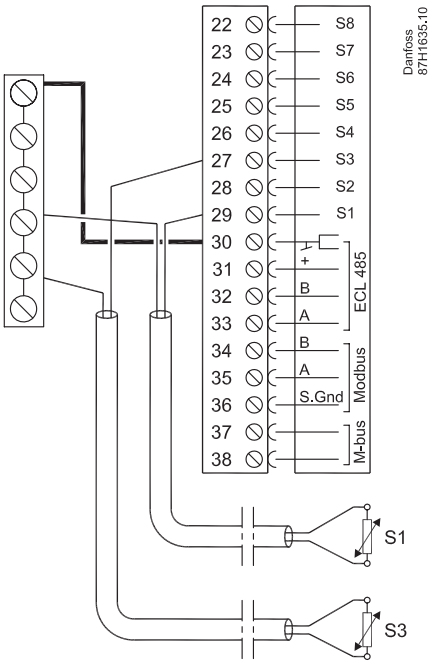

S1...S8

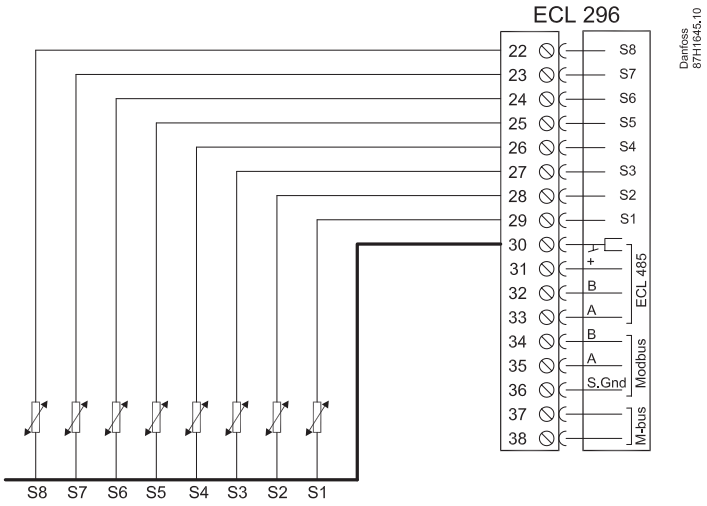

S7

A230.1	A237.1	A247.1	A260.1	A266.1
	A237.2	A247.2		A266.2
		A247.3		A266.10

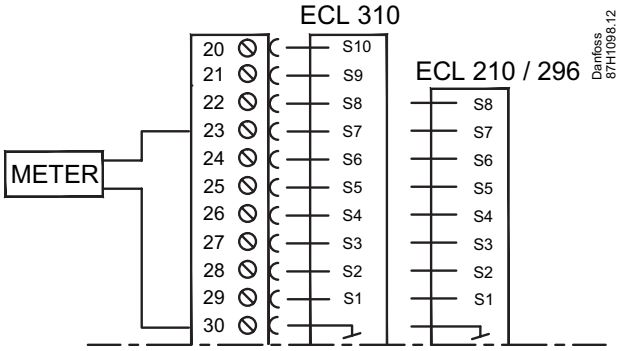

S7

A / B ?

A:

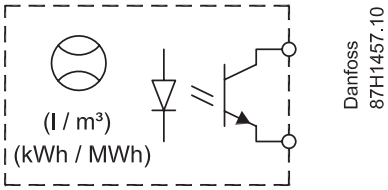

B:

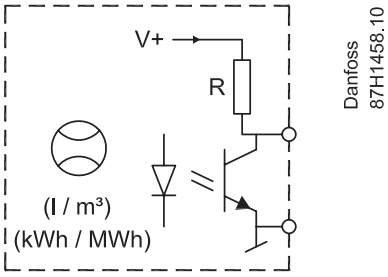

A:

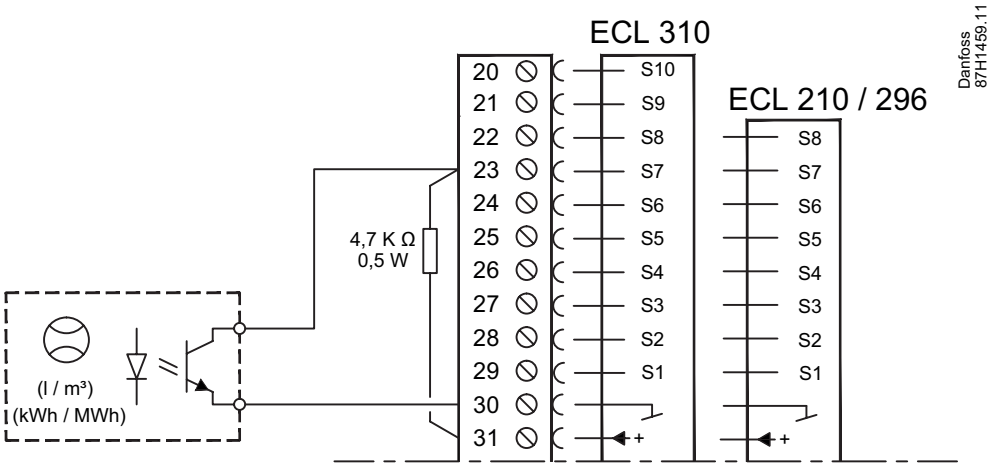
ECL 310
ECL 210 / 296
Danfoss
87H1459.11
20
21
22
23
24
25
26
27
28
29
30
31
S10
S9
S8
S7
S6
S5
S4
S3
S2
S1
4,7 K Ω
0,5 W
(l / m³)
(kWh / MWh)
+

B:

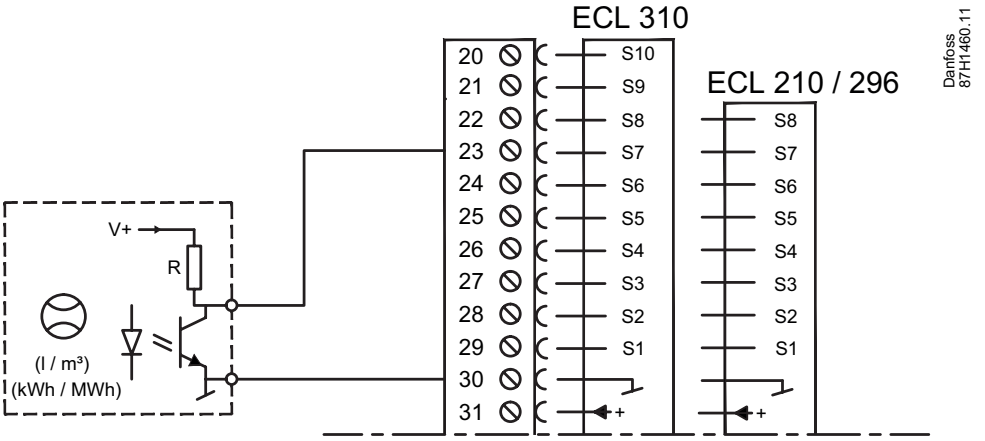
ECL 310
ECL 210 / 296
Danfoss
87H1460.11
20
21
22
23
24
25
26
27
28
29
30
31
S10
S9
S8
S7
S6
S5
S4
S3
S2
S1
V+
R
(l / m³)
(kWh / MWh)
+

ECA 30 / 31

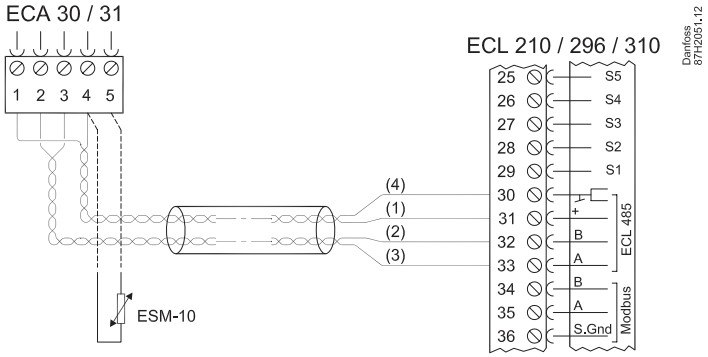

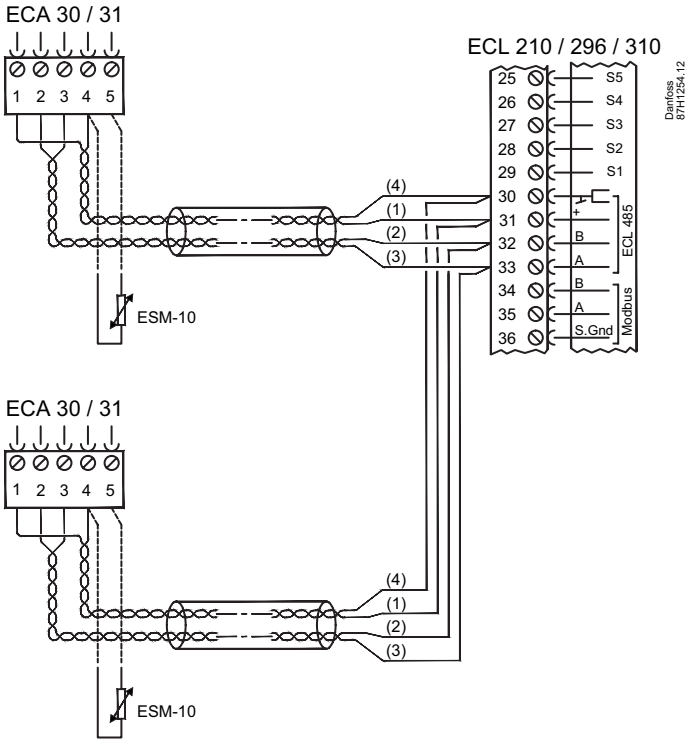

Modbus

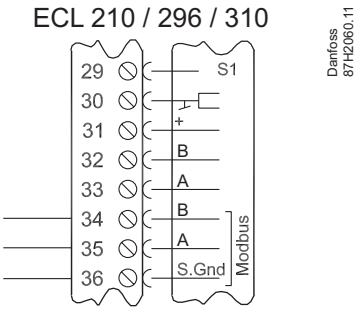

M-bus

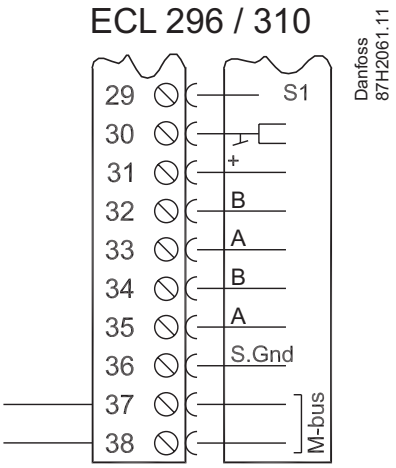

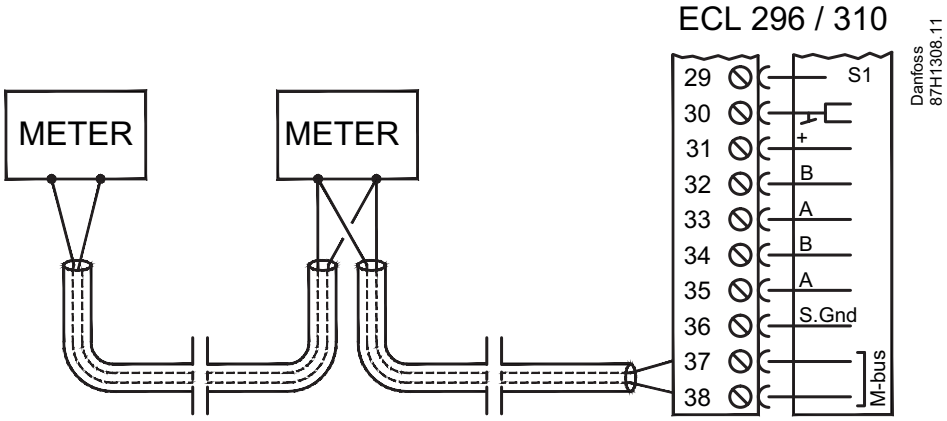

Master / slave

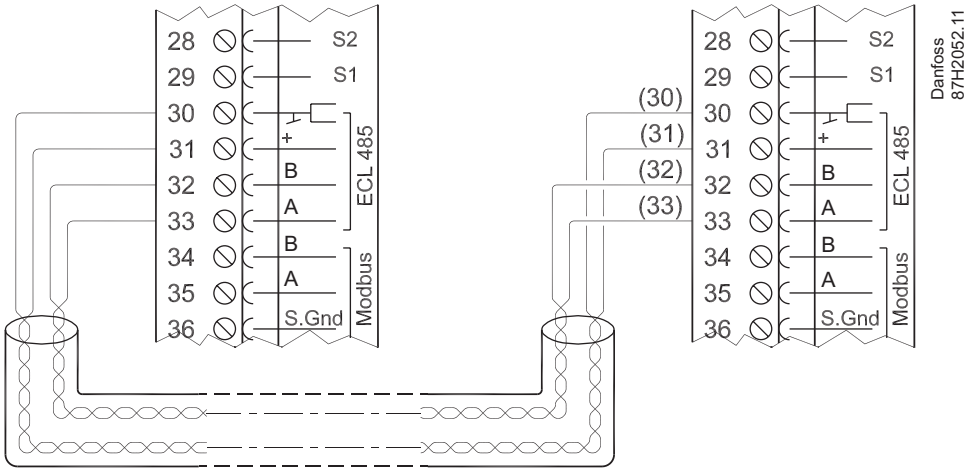

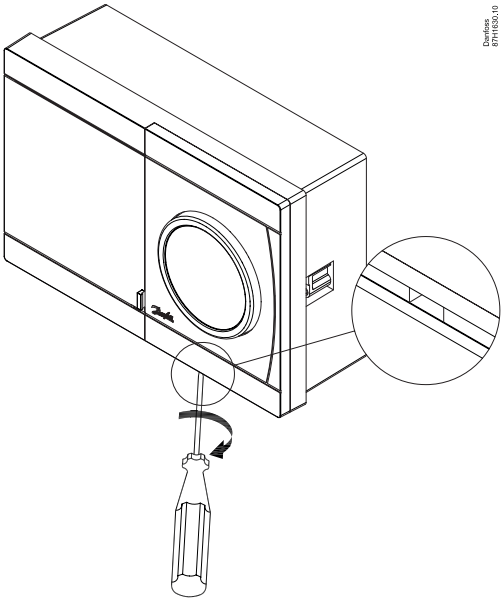

A:

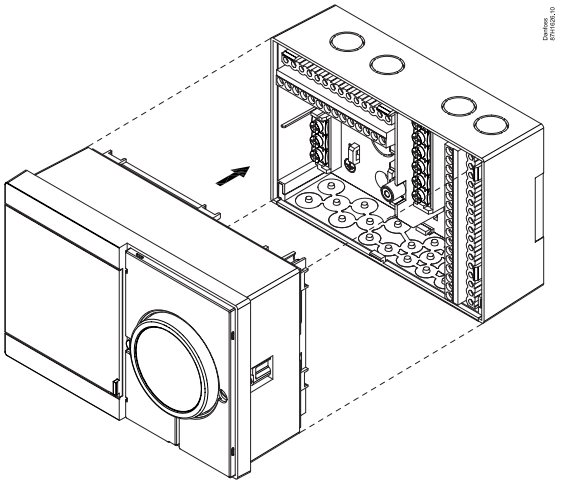

B:

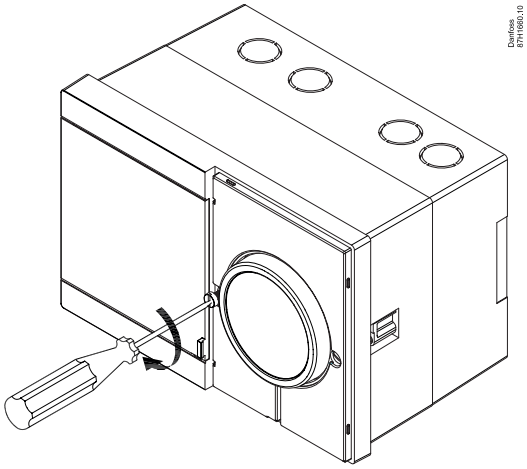

C:

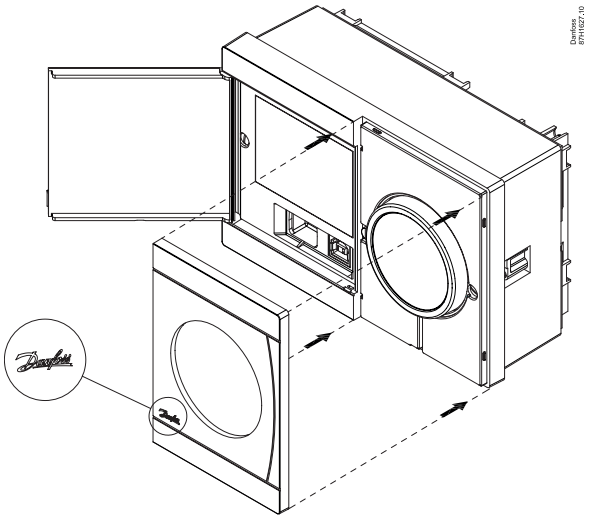

D:

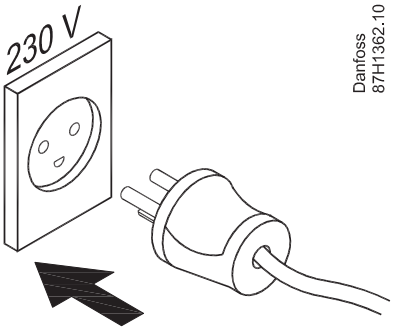

© Danfoss | 2018.05 | 11

A:

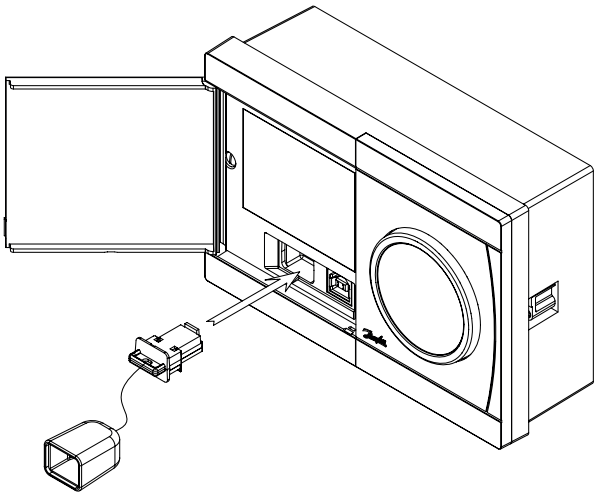

B:

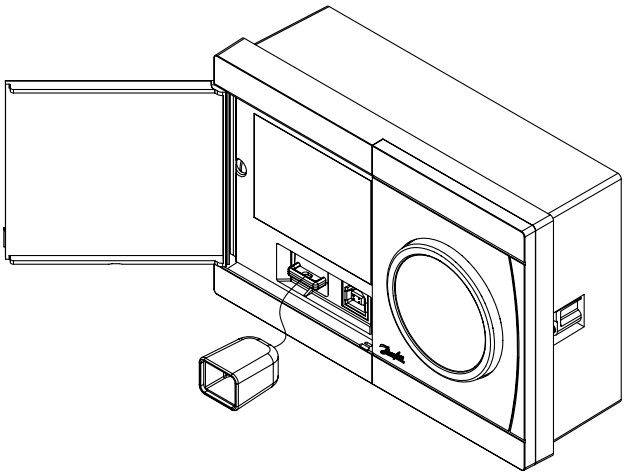

C:

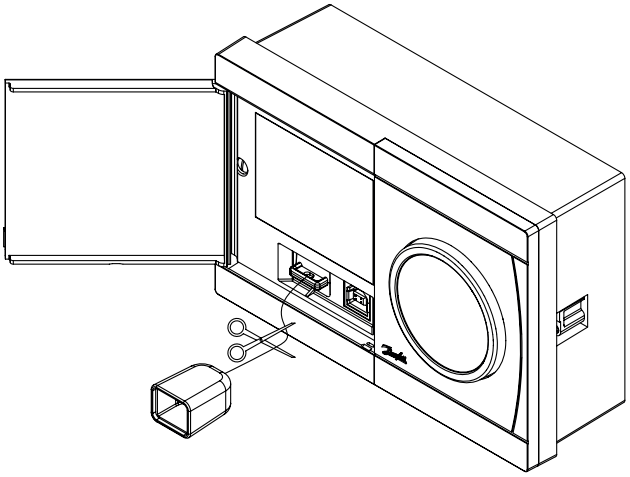

D:

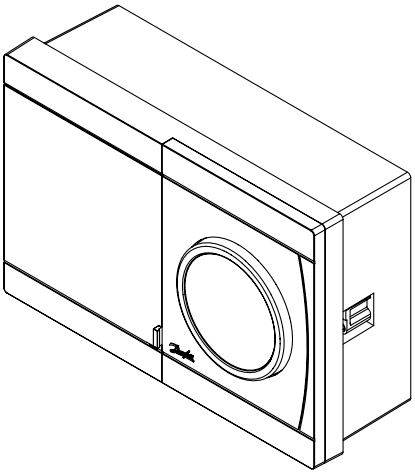

? **ECL Comfort 296: www.heating.danfoss.com**

Danfoss A/S
Heating Segment • heating.danfoss.com • +45 7488 2222 • E-Mail: heating@danfoss.com

Danfoss can accept no responsibility for possible errors in catalogues, brochures and other printed material. Danfoss reserves the right to alter its products without notice. This also applies to products already on order provided that such alterations can be made without subsequential changes being necessary in specifications already agreed.
All trademarks in this material are property of the respective companies. Danfoss and all Danfoss logotypes are trademarks of Danfoss A/S. All rights reserved.