TECHNICAL DATA

EURO STANDARD®

CONNECTING WORLDS

// EDITION MAY 2017

TECHNICAL DATA // 5
BUTTFUSION FITTINGS // 15
TRANSITION FITTINGS // 27
ELECTROFUSION FITTINGS // 47
ELECTROFUSION WELDING UNITS // 65
ACCESSORIES // 71
BUTTFUSION WELDING UNITS // 77

TECHNICAL DATA

DEFINITIONS // POLYETHYLENE CLASSIFICATION //
MATERIALS // PRODUCT TESTINGS // MARKING //
LABORATORY ACCREDITATION // CONFORMITY MARKINGS //
QUALITY SYSTEM CERTIFICATION // ENVIRONMENTAL CERTIFICATION //
PIPE-FITTINGS DIMENSIONS // PRESSURES // DIMENSIONS //

// DEFINITIONS

This publication, referring to the UNI, EN and ISO standards, uses the following geometrical definitions:

d_n	**NOMINAL OUTSIDE DIAMETER**	specified outside diameter, in millimeters, of a PE pipe or fitting
e_n	**NOMINAL WALL THICKNESS**	numerical designation of the wall thickness, in millimeters, of a PE pipe or fitting
d_e	**OUTSIDE DIAMETER**	external diameter, in millimeters, measured at any point of the circumference of a PE pipe or fitting
d_{em}	**MEAN OUTSIDE DIAMETER**	dimension value of the external circumference of a PE pipe/fitting divided by π, in millimeters
SDR	**STANDARD DIMENSION RATIO**	relationship between the outside nominal pipe diameter d_n and the nominal wall thickness e_n
D	**NOMINAL OUTSIDE DIAMETER STEEL PIPE**	nominal outside diameter, in inches, of a steel pipe
G	**GAS THREAD DIAMETER**	dimension, in inches, of the thread part

// POLYETHYLENE CLASSIFICATION

The polyethylene classification, defined by the ISO and the EN standards is issued depending on the parameter MRS = MINIMUM REQUIRED STRENGTH, that is the minimum resistance that the polyethylene must guarantee after 50 working years at the reference temperature of 20 °C.

Each MRS has a design stress value sigma (σs), derived by MRS dividing it with the design coefficient (C). In case of water distribution the UNI EN 12201 standard defines equal to 1,25.

DESIGNATION	MPa	
	MRS	σs (C=1,25)
PE 80	8,0	6,3
PE 100	10,0	8,0

The choice of the polyethylene type determines the nominal pressure PN of the pipe/fitting. For water distribution corresponds to the maximum allowable operating pressure (PFA) in bar which can be borne at the temperature of 20°C for a period of 50 years, based on the design coefficient.

// MATERIALS

CHARACTERISTICS	TYPICAL VALUES	UNITS	TEST METHODS
DENSITY	958 – 959	$\frac{kg}{m^3}$	ISO 1183
MELT MASS FLOW RATE (MFI) 5 KG/190°C	0,23 – 0,45	g/10 min	ISO 1133
TENSILE STRENGTH AT BREAK	35	MPa	ISO 527
TENSILE STRENGTH AT YIELD	23 – 25	MPa	ISO 527
TENSILE ELONGATION AT BREAK	700	%	ISO 527
CARBON BLACK CONTENT	2,0 – 2,5	%	ISO 6964
LINEAR THERMAL EXPANSION COEFFICIENT	$2,0 \times 10^{-4}$	$\frac{m}{m\ °C}$	
BRITTLENESS TEMPERATURE	– 80	°C	ASTM D746

All fittings in the EUROSTANDARD range are injection moulded using polyethylene compounds type PE 100 and PE 100-RC suitable for pipelines for the distribution of gas, water and other fluids under pressure.

The characteristics are in conformity with the standards EN 1555, EN 12201 and EN ISO 15494. The compounds used, normally added at the origin with carbon black for the UV stabilization, are suitable for drinking water and foodstuffs as provided in the DM 21 March 1973 and the DM n. 174 dated 6 April 2004.

EUROSTANDARD fittings are weldable with PE 80 and 100 pipes and fittings having melt mass-flow rate 0,2 - 1,4 g/10 min (ISO 1133 5 kgs - 190°C).

PE 100 fittings are weldable with PE 80 pipes/fittings and viceversa, either using buttfusion (if only of the same thickness and diameter) or using electrofusion.

// PRODUCT TESTINGS

EUROSTANDARD fittings are continuously monitored throughout the entire production process in accordance with the internal testing programs in compliance with the standards EN 1555, EN 12201 and EN ISO 15494.

The testing activities are continuously carried out following up the complete observance of the reference standards and foresee tests of mechanical and physical type, either on the fittings and on the raw material.

Particularly, the production is subjected to the following tests:

MELT MASS FLOW RATE (MFR)

UNI EN ISO 1133-1

DIMENSIONAL CONTROL – APPEARANCE TEST – MARKING CONTROL – ELECTRICAL WIRE RESISTANCE

UNI EN 1555

UNI EN 12201

UNI EN ISO 15494

UNI EN ISO 3126

RESISTANCE TO HYDROSTATIC INTERNAL PRESSURE AT 20°C AND 80°C

UNI EN ISO 1167

TENSILE STRENGTH ON BUTTFUSION FITTINGS

ISO 13953

IMPACT RESISTANCE ON ELECTROFUSION SADDLES

UNI EN 1716

DECOHESIVE RESISTANCE ON ELECTROFUSION FITTINGS (PEEL TEST AND CRUSH TEST)

ISO 13954

ISO 13955

ISO 13956

OXIDATION INDUCTION TIME (OIT)

ISO 11357-6

// MARKING

EUROSTANDARD fittings have the following information stated on the fitting and/or on a label:

EURO	producer identification
W17001 01/17	batch reference and/or month and year of manufacture
PN _	nominal pressure rating at 20°C for water
S _	gas series of pipe
SDR _	standard dimension ratio
d _	nominal size of the fitting (mm)
PE 100	raw material type used
UNI _ EN _ ISO _	product standard
RINA	conformity marking
GRADO B	dimensional tolerance

The barcode label is applied on the electrofusion fittings containing the welding parameters according to standard ISO 13950 and the traceability data of the fitting according to standard ISO 12176-4.

// LABORATORY ACCREDITATION

The EUROLAB Laboratory, belonging to Eurostandard, operates in accordance to the standard EN ISO/IEC 17025:2005 and is accredited from ACCREDIA - Italian Accreditation Body with accreditation number LAB N° 0740.

The accreditation certifies the technical qualification of the Laboratory relatively to the testings detailed in the enclosed sheets to the certificate - download on the website **accredia.it**. The in-force status of the accreditation can be checked on the same website.

// CONFORMITY MARKINGS

Eurostandard is authorized to use the RINA Quality Marking with reference to the standards UNI EN 12201-3, EN 12201-3, UNI EN 1555-3, EN 1555-3, UNI EN ISO 15494 for the fittings as detailed in the enclosed papers to the Conformity Certificates.

For information on the validity of the Conformity Certificates, visit the website **rina.org**. **Download of Certificates of Conformity and relevant enclosures on website eurostandard.it**

CERTIFICATO DI CONFORMITÀ E LICENZA
D'USO DEL MARCHIO DI QUALITÀ RINA
N. 0010/00

CERTIFICATO DI CONFORMITÀ E LICENZA
D'USO DEL MARCHIO DI QUALITÀ RINA
N. 0010/01

Eurostandard is also authorized to use several conformity markings of primary international certification bodies operating in the relevant sector.

Here below are some examples. For information on the validity of the Conformity Certificates and the applicability to each fitting, please contact Eurostandard.

CERTIFICATO DI CONFORMITÀ E LICENZA
D'USO DEL MARCHIO DI QUALITÀ RINA
N. 0010/00

// QUALITY SYSTEM CERTIFICATION

UNI EN ISO 9001

The **EUROSTANDARD QUALITY MANAGEMENT SYSTEM** involves and manages all activities within the Company in order to achieve the optimum level of the quality standards. That is on the basis of the directions imposed in the ISO 9001 standard, which points out the requirements for the supplier to show its capability in checking the processes which determine the conformity of the finished product.

The codified and controlled management of the company activities are described in the documents which form the system manual and the relative managing and technical procedures.

The quality assurance guarantees the integration of the various activities which determine the quality of the system itself.

The correct management of all documents allows the tracing of the product through the batch reference number or other codes assigned during the production.

The Eurostandard policy is published on the website **eurostandard.it**

CERTIFICATO N. 21071/10/S
CERTIFICATE No.

SI CERTIFICA CHE IL SISTEMA DI GESTIONE PER LA QUALITÀ DI
IT IS HEREBY CERTIFIED THAT THE QUALITY MANAGEMENT SYSTEM OF

EUROSTANDARD S.P.A.

Z.I. LAGO 38038 TESERO (TN) ITALIA

NELLE SEGUENTI UNITÀ OPERATIVE / *IN THE FOLLOWING OPERATIONAL UNITS*

Z.I. LAGO 38038 TESERO (TN) ITALIA
MAGAZZINO LOCALITA' PIANA RUAIA 38030 CASTELLO MOLINA DI FIEMME ITALIA

È CONFORME ALLA NORMA / *IS IN COMPLIANCE WITH THE STANDARD*

ISO 9001:2008

PER I SEGUENTI CAMPI DI ATTIVITÀ / *FOR THE FOLLOWING FIELD(S) OF ACTIVITIES*

EA:14
EA:29

PROGETTAZIONE, PRODUZIONE E COMMERCIALIZZAZIONE DI RACCORDI IN PE/PP ELETTROSALDABILI, TESTA A TESTA E DI TRANSIZIONE PER IL CONVOGLIAMENTO DI GAS COMBUSTIBILI E FLUIDI IN PRESSIONE.

DESIGN, PRODUCTION AND MARKETING OF PE/PP ELECTROFUSION, BUTT FUSION AND TRANSITION FITTINGS FOR THE SUPPLY OF GASEOUS FUELS AND FLUIDS UNDER PRESSURE.

Per informazioni sulla validità del certificato, visitare il sito www.rina.org

For information concerning validity of the certificate, you can visit the site www.rina.org

Riferire al Manuale della Qualità per i dettagli delle esclusioni ai requisiti della norma

Reference is to be made to the Quality Manual for details regarding the exemptions from the requirements of the standard

La validità del presente certificato è subordinata a sorveglianza periodica annuale / remeritate ed al riesame completo del sistema di gestione con periodicità triennale
The validity of this certificate is dependent on an annual / six monthly audit and on a complete review, every three years, of the management system
L'uso e la validità del presente certificato sono soggetti al rispetto del documento RINA: Regolamento per la Certificazione di Sistemi di Gestione per la Qualità
The use and validity of this certificate are subject to compliance with the RINA document : Rules for the certification of Quality Management Systems

Prima emissione *First Issue*	31.03.2010
Emissione corrente *Current Issue*	08.09.2015
Data scadenza *Expiry Date*	01.09.2017

Ing. Michele Francioni
(Chief Executive Officer)

RINA Services S.p.A.
Via Corsica 12 - 16128 Genova Italy

CISQ è la Federazione Italiana di Organismi di Certificazione dei sistemi di gestione aziendale

CISQ is the Italian Federation of management system Certification Bodies

// ENVIRONMENTAL CERTIFICATION

UNI EN ISO 14001

The **EUROSTANDARD ENVIRONMENTAL MANAGEMENT SYSTEM** involves and manages all activities within the Company in order to render to the minimum the environmental impacts deriving from themselves and avoid pollution. This happens in conformity to the prescriptions of the standard ISO 14001, which specifies the requisites which allow to the organization to actuate a policy and establish the aims, taking also into consideration legislative prescriptions and informations relating to the affecting environmental impacts.

The management and control methodologies of the firm activities are described in details in the System Manual and in the environmental procedures.

The Eurostandard policy for environment is published on the website **eurostandard.it**

CERTIFICATO N. EMS-2935/S
CERTIFICATE No.

SI CERTIFICA CHE IL SISTEMA DI GESTIONE AMBIENTALE DI
IT IS HEREBY CERTIFIED THAT THE ENVIRONMENTAL MANAGEMENT SYSTEM OF

EUROSTANDARD S.P.A.

Z.I. LAGO 38038 TESERO (TN) ITALIA

NELLE SEGUENTI UNITÀ OPERATIVE / *IN THE FOLLOWING OPERATIONAL UNITS*

Z.I. LAGO 38038 TESERO (TN) ITALIA
MAGAZZINO LOCALITA' PIANA RUAIA 38030 CASTELLO MOLINA DI FIEMME ITALIA

È CONFORME ALLA NORMA / *IS IN COMPLIANCE WITH THE STANDARD*

ISO 14001:2004

E AL DOCUMENTO ACCREDIA RT-09

PER I SEGUENTI CAMPI DI ATTIVITÀ / *FOR THE FOLLOWING FIELD(S) OF ACTIVITIES*

EA:14
EA:29

PROGETTAZIONE, PRODUZIONE E COMMERCIALIZZAZIONE DI RACCORDI IN PE/PP ELETTROSALDABILI, TESTA/TESTA E DI TRANSIZIONE PER IL CONVOGLIAMENTO DI GAS COMBUSTIBILI E FLUIDI IN PRESSIONE, PRODOTTI TRAMITE PROCESSI DI STAMPAGGIO AD INIEZIONE, TORNITURA E SALDATURA.

DESIGN, PRODUCTION AND TRADE OF PE/PP ELECTROFUSION, BUTT FUSION AND TRANSITION FITTINGS FOR THE SUPPLY OF GASEOUS FUELS AND FLUIDS UNDER PRESSURE, MADE BY INJECTION MOULDING, TURNING AND WELDING PROCESSES.

Per informazioni sulla validità del certificato, visitare il sito www.rina.org

For information concerning validity of the certificate, you can visit the site www.rina.org

L'uso e la validità del presente certificato sono soggetti al rispetto del documento RINA: Regolamento per la Certificazione di Sistemi di Gestione Ambientale
The use and the validity of this certificate are subject to compliance with the RINA document: Rules for the Certification of Environmental Management Systems
La validità del presente certificato è subordinata a sorveglianza periodica annuale / remeritate ed al riesame completo del sistema di gestione con periodicità triennale
The validity of this certificate is dependent on an annual / six monthly audit and on a complete review, every three years, of the management system

Prima emissione *First Issue*	30.03.2010
Emissione corrente *Current Issue*	21.07.2015
Data scadenza *Expiry Date*	20.07.2018

Ing. Michele Francioni
(Chief Executive Officer)

RINA Services S.p.A.
Via Corsica 12 - 16128 Genova Italy

CISQ è la Federazione Italiana di Organismi di Certificazione dei sistemi di gestione aziendale

CISQ is the Italian Federation of management system Certification Bodies

// PIPE-FITTINGS DIMENSIONS

UNI EN 12201
UNI EN 1555
UNI EN ISO 15494

	SDR 17	SDR 11	SDR 7,4
PE 100	PN 10	PN 16	PN 25
d_n	wall thickness e_n (mm)	wall thickness e_n (mm)	wall thickness e_n (mm)
20	1,8 3,0 ★	2,0 3,0 ★	3,0
25	1,8 3,0 ★	2,3 3,0 ★	3,5
32	2,0 3,0 ★	3,0	4,4
40	2,4 3,0 ★	3,7	5,5
50	3,0	4,6	6,9
63	3,8	5,8	8,6
75	4,5	6,8	10,3
90	5,4	8,2	12,3
110	6,6	10,0	15,1
125	7,4	11,4	17,1
140	8,3	12,7	19,2
160	9,5	14,6	21,9
180	10,7	16,4	24,6
200	11,9	18,2	27,4
225	13,4	20,5	30,8
250	14,8	22,7	34,2
280	16,6	25,4	38,3
315	18,7	28,6	43,1
355	21,1	32,2	48,5
400	23,7	36,3	54,7
450	26,7	40,9	61,5
500	29,7	45,4	
560	33,2	50,8	
630	37,4	57,2	
710	42,1	64,5	

★ minimum thickness outlined by UNI 9034 for gas distribution

// OPERATING PRESSURES OF PE PIPELINES
FOR WATER SUPPLY

UNI EN 12201

°C	MAXIMAL OPERATING PRESSURE (bar) ACCORDING TO TEMPERATURE OF THE CARRIED FLUID					
	PN 8	PN 10	PN 12,5	PN 16	PN 20	PN 25
20	**8,0**	**10,0**	**12,5**	**16,0**	**20,0**	**25,0**
30	7,0	8,7	10,9	13,9	17,4	21,8
40	5,9	7,4	9,3	11,8	14,8	18,5

// OPERATING PRESSURES OF PE PIPELINES
FOR GASEOUS FUELS SUPPLY

D.M. 16.04.2008

SDR ★	ALLOWED DIAMETERS (mm)	PE 80 PRESSURE (bar)	PE 100 PRESSURE (bar)
17	≥ 50	3,1	3,8
11	≥ 16 ★	5	5

★ minimum thickness outlined by UNI 9034

// DIMENSIONS

All dimensions are in millimeters and are intended as nominal and standard sizes; weights are in grams.

EUROSTANDARD reserves the right to change geometries and dimensions of any product.

BUTTFUSION FITTINGS

90° ELBOW // 45° ELBOW // 90° AND 45° SEGMENT BEND // 90° TEE //
90° REDUCED TEE MOULDED // 90° REDUCED TEE ASSEMBLED // STUB END //
CAP // REDUCER //

COD. 20.10
90° ELBOW

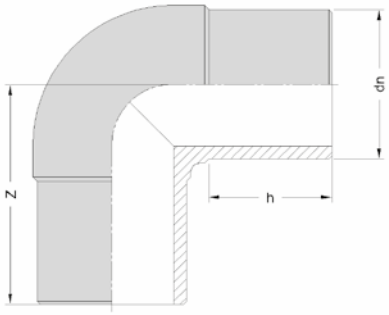

DIMENSIONS			WEIGHTS		
dn	h	Z	SDR 17	SDR 11	SDR 7,4
			PN 10	PN 16	PN 25
20	49	75		30	
25	53	80		50	
32	59	89		55	65
40	59	85		75	100
50	60	89		120	175
63	68	103		235	310
75	75	130		385	540
90	84	147	470	640	875
110	86	160	780	1050	1460
125	89	159	915	1310	1800
140	94	172	1250	1795	2500
160	115	225	2155	3000	4100
180	121	235	2675	3985	
200	127	252	3335	5100	
225	138	274	5600	7720	
250	143	300	7400	10350	
280			•	•	
315	180	392	12440	18750	
355			•	•	
400			•	•	
500			•	•	

• on request

_ Moulded in PE 100 with long collar
_ Buttfusion unadvised for diam. < 63 mm

COD. 20.15
45° ELBOW

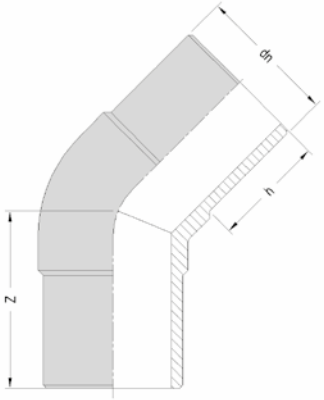

DIMENSIONS			WEIGHTS		
dn	h	Z	SDR 17 PN 10	SDR 11 PN 16	SDR 7,4 PN 25
32	50	64		40	50
40	59	71		65	100
50	60	74		105	150
63	68	85		190	255
75	73	92		290	400
90	83	106	350	480	640
110	84	112	495	720	1000
125	89	125	740	1045	1500
140	95	128	970	1390	1950
160	100	142	1365	1990	2800
180	125	183	2300	3355	
200	131	197	3150	4385	
225	134	213	4360	6110	
250	142	232	5750	8140	
280			•	•	
315	210	318	11980	17000	
355			•	•	
400			•	•	
500			•	•	

• on request

_ Moulded in PE 100 with long collar
_ Buttfusion unadvised for diam. < 63 mm

COD. 20.12
90° SEGMENT BEND

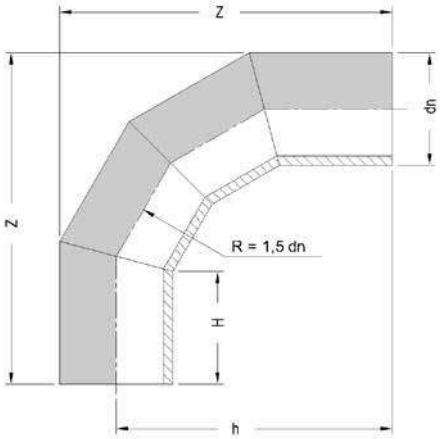

DIMENSIONS *					WEIGHTS	
dn	H	Z	h	R	SDR 17 PN 10	SDR 11 PN 16
280	200	685	545	420	17000	24000
355	300	913	737	533	31200	45900
400	300	992	792	600	45100	66600
450	300	1079	854	675	60700	89600
500	300	1166	916	750	75000	110600
560	350	1319	1039	840	110500	163000
630	350	1441	1126	945	147000	217000

COD. 20.17
45° SEGMENT BEND

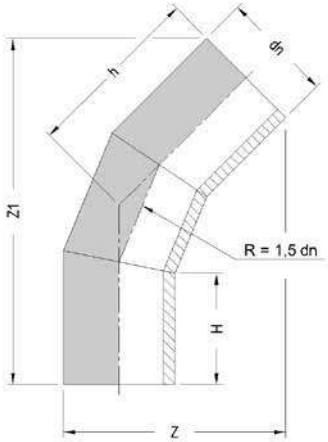

DIMENSIONS *						WEIGHTS	
dn	H	Z	Z1	h	R	SDR 17 PN 10	SDR 11 PN 16
280	200	461	634	313	420	12600	18500
355	300	621	893	449	533	21640	31820
400	300	674	944	470	600	28470	42060
450	300	731	996	490	675	37860	55890
500	300	788	1048	510	750	48540	71570
560	350	892	1197	585	840	70770	104320
630	350	973	1273	615	945	92430	136320

* DIMENSIONS AND WEIGHTS MAY BE CHANGED

_ On request 90° and 45° segment bend SDR 7,4 PN 25
_ A derating factor of 0,8 shall be applied to the indicated PN (of the pipe): maximum allowable operating pressure = PN x 0,8

COD. 20.20
90° TEE

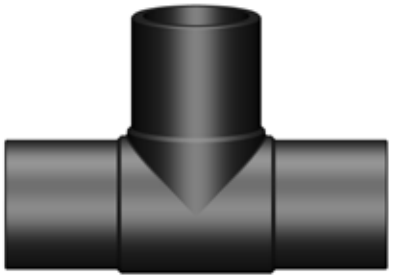

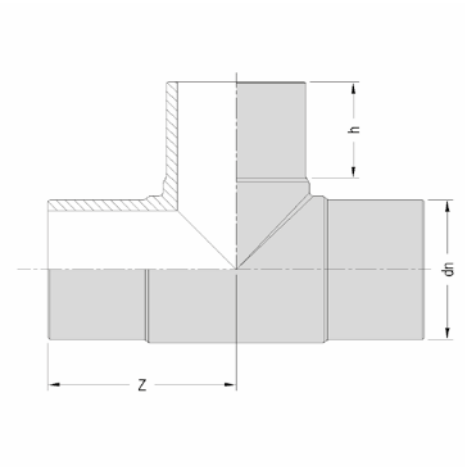

DIMENSIONS			WEIGHTS		
dn	h	Z	SDR 17 PN 10	SDR 11 PN 16	SDR 7,4 PN 25
20	59	80		45	
25	60	76		55	
32	60	82		75	100
40	59	84		115	150
50	60	89		180	250
63	67	103		320	460
75	74	126		540	750
90	80	135	580	850	1170
110	95	162	975	1495	2000
125	90	185	1540	2230	2650
140	95	182	1790	2688	3500
160	106	216	2919	4244	5150
180	124	243	4140	5840	
200	130	259	5150	7485	
225	136	282	7250	9700	
250	142	307	10080	13870	
280			•	•	
315	178	388	19800	27650	
355			•	•	
400			•	•	
500			•	•	

• on request

_ Moulded in PE 100 with long collar
_ Buttfusion unadvised for diam. < 63 mm

COD. 20.21

90° REDUCED TEE MOULDED

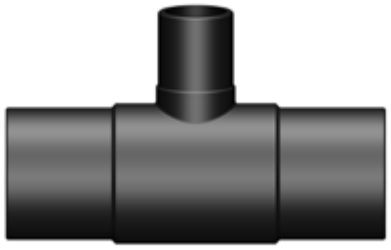

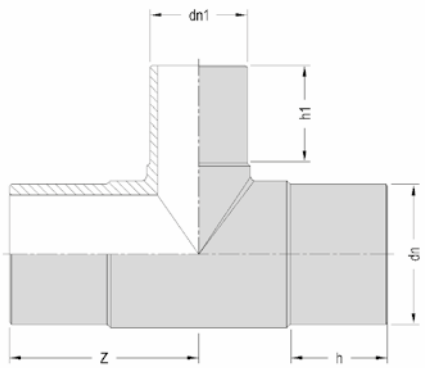

DIMENSIONS					WEIGHTS	
dn	dn1	h	h1	Z	SDR 17 PN 10	SDR 11 PN 16
90	**63**	90	74	147		830
110	**63**	95	80	161		1200
110	**90**	95	89	162		1375
125	**63**	95	80	185		■
125	**90**	95	85	185	■	2000
125	**110**	95	95	185	■	2120
160	**90**	106	85	216	2500	3630
160	**110**	106	95	216	3570	3730
200	**63**	130	80	258		■
200	**110**	130	90	258	■	■
200	**160**	130	115	258	■	■

■ in preparation

_ Moulded in PE 100 with long collar
_ Alternative electrofusion solution: spigot saddle (cod. 21.20)

COD. 20.21

90° REDUCED TE ASSEMBLED

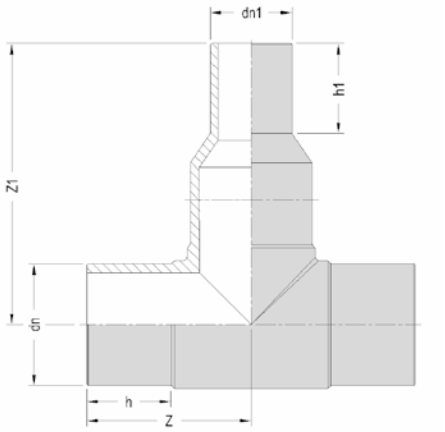

DIMENSIONS						WEIGHTS		
dn	dn1	h	h1	Z	Z1	SDR 17 PN 10	SDR 11 PN 16	SDR 7,4 PN 25
63	**32**	67	61	103	180		370	570
63	**40**	67	52	103	175		365	590
63	**50**	67	57	103	173		440	545
75	**40**	74	60	126	202		640	871
75	**50**	74	59	126	208		625	895
75	**63**	74	67	126	208		660	935
90	**50**	80	61	135	216	700	975	1490
90	**63**	80	68	135	224	715		1370
90	**75**	80	71	135	217	780	1015	1600
110	**50**	95	57	162	252	1705	1635	
110	**63**	95	69	162	263	1115		2430
110	**75**	95	72	162	251	1705	1705	2490
110	**90**	95	81	162	257	1170		2370
125	**75**	90	78	185	257	1630	2180	2680
125	**90**	90	81	185	255			2771
125	**110**	90	84	185	256			2910
140	**90**	95	80	182	293	3045	2900	4630
140	**110**	95	83	182	282	2255	2920	4685
140	**125**	95	89	182	286	2300	3030	4850

DIMENSIONS						WEIGHTS		
dn	dn1	h	h1	Z	Z1	SDR 17 PN 10	SDR 11 PN 16	SDR 7,4 PN 25
160	**110**	106	86	216	317			5725
160	**125**	106	91	216	308	3365	4470	6970
160	**140**	106	92	216	306	3435	5005	7100
180	**125**	124	88	243	357	5120	6510	
180	**140**	124	96	243	360	5190	6645	
180	**160**	124	101	243	361	5295	6760	
200	**140**	130	95	259	376	6380	8360	
200	**180**	130	109	259	379	6510	9400	
225	**90**	136	89	282	451		10700	
225	**125**	136	99	282	462	8780	10995	
225	**160**	136	120	282	442	8950	11825	
225	**180**	136	125	282	436	9030	11960	
225	**200**	136	130	282	428	9230	12865	
250	**160**	142	120	307	487	20000	22000	
250	**180**	142	124	307	474	11700	15775	
250	**200**	142	130	307	469	11450	17420	
250	**225**	142	134	307	466	12120	16185	
315	**160**	178	110	388	641	21500	30585	
315	**200**	178	130	388	608	22815	32595	
315	**225**	178	138	388	605	24980	30400	
315	**250**	178	150	388	597	28600	31400	

_ On request other diameters assembled by buttfusion system with a reducer on the central exit
_ Alternative electrofusion solution: spigot saddle (cod. 21.20)
_ Delivery times to be agreed according to quantity

COD. 20.30
STUB END

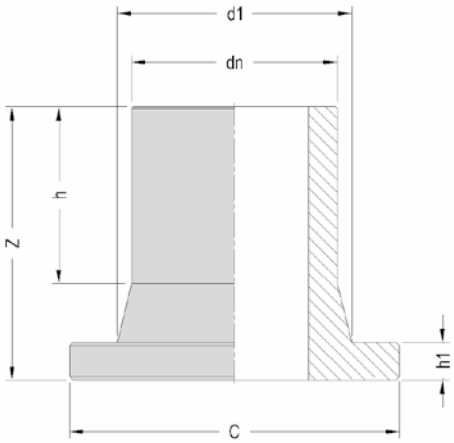

	DIMENSIONS											WEIGHTS		
	h			h1			Z			d1	C	SDR 17	SDR 11	SDR 7,4
dn	PN 10	PN 16	PN 25	PN 10	PN 16	PN 25	PN 10	PN 16	PN 25			PN 10	PN 16	PN 25
20			45			7			67	27	45			25
25		48	50		9	10		75	75	33	58		40	45
32		68	69		10	11		96	95	40	68		65	80
40	63	62	69	11	11	12	87	87	94	50	78	70	80	100
50	62	61	66	12	12	13	88	95	94	61	88	100	120	150
63	66	86	65	14	14	16	98	120	96	75	102	145	180	255
75	74	94	68	16	16	18	116	130	109	89	122	250	285	400
90	98	97	81	17	17	20	140	140	121	105	138	350	405	610
110	112	112	87	18	18	21	155	153	128	125	158	485	610	875
125	93	122	107	18	25	28	131	167	161	132	158	505	820	1225
140	104	108	105	18	25	29	154	156	159	155	187	895	1140	1650
160	109	106	104	18	30	29	156	159	160	175	212	1035	1520	2060
180	118	145	114	20	30	36	169	196	175	180	212	1140	1940	2400
200	116	112	112	24	32	36	181	182	188	232	268	2120	3000	3830
225	125	152	143	24	32	36	190	219	209	235	268	2130	3140	4200
250	134	133	123	25	35	40	205	205	203	285	320	3370	4695	5000
280	165	165	164	25	35	40	220	230	234	291	320	3400	5170	5300
315	202	205	143	25	35	45	267	275	228	335	370	5300	9200	7000
355	200	200		30	40		270	280		373	430	7200	10700	
400	230	230		38	48		308	310		427	482	10500	15150	
450												•	•	
500												•	•	
560												•	•	
630												•	•	

Stub end complete with NBR gasket

• on request

_ Moulded in PE 100 with long collar
_ Buttfusion unadvised for diam. < 63 mm

COD. 20.35
CAP

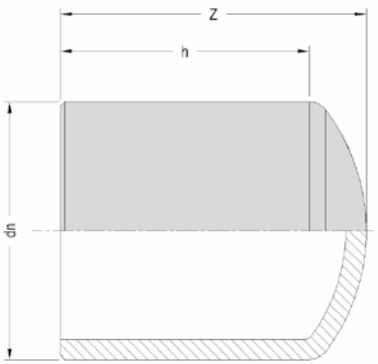

DIMENSIONS			WEIGHTS		
dn	h	Z	SDR 17 PN 10	SDR 11 PN 16	SDR 7,4 PN 25
20	54	59			15
25	60	68		15	20
32	53	59		20	40
40	57	68	31	35	42
50	61	74	37	50	76
63	64	80	65	85	115
75	74	89	100	150	200
90	82	100	165	230	340
110	91	118	270	405	600
125	102	122	350	570	790
140	103	125	450	780	1150
160	101	134	665	960	1500
180	114	150	970	1450	
200	119	163	1310	1890	
225	124	180	1750	2660	
250	132	179	2275	3355	
280			•	•	
315	175	298	5100	7540	

• on request

_ Moulded in PE 100 with long collar
_ Buttfusion unadvised for diam. < 63 mm

COD. 20.50
REDUCER

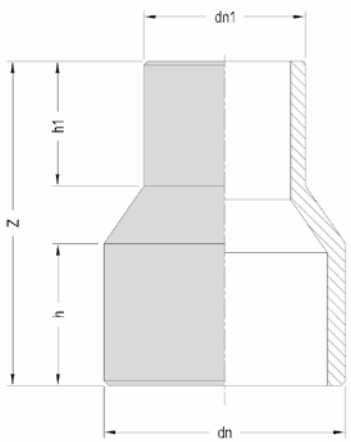

DIMENSIONS					WEIGHTS		
dn	dn1	h	h1	Z	SDR 17 PN 10	SDR 11 PN 16	SDR 7,4 PN 25
25	**20**	49	50	113		20	20
32	**20**	55	52	124		30	
32	**25**	61	59	130		30	30
40	**20**	59	52	130		40	
40	**25**	59	54	128		40	
40	**32**	61	48	125	40	45	70
50	**25**	60	50	135		60	80
50	**32**	60	47	134		65	90
50	**40**	60	62	134	55	75	110
63	**25**	64	57	140		90	
63	**32**	64	61	143	70	100	130
63	**40**	68	52	139	70	105	150
63	**50**	63	57	132	80	120	150
75	**40**	72	60	147	105	165	230
75	**50**	72	59	153	110	165	240
75	**63**	73	67	154	135	200	280
90	**50**	82	61	162	180	260	345
90	**63**	80	68	169	180	280	400
90	**75**	83	71	164	205	305	445
110	**50**	88	57	177	280	400	
110	**63**	87	69	188	285	410	555
110	**75**	85	72	173	285	425	620
110	**90**	86	81	181	330	485	690
125	**63**	96	68	199		600	
125	**75**	95	78	191	385	610	790
125	**90**	96	81	191	430	625	855
125	**110**	96	84	192	460	720	985
140	**90**	95	80	205	555	815	1145
140	**110**	94	83	193	560	870	1215
140	**125**	95	89	198	590	990	1380

DIMENSIONS					WEIGHTS		
dn	dn1	h	h1	Z	SDR 17 PN 10	SDR 11 PN 16	SDR 7,4 PN 25
160	**90**	101	82	221	775	1040	
160	**110**	101	103	270	950		
160	**110**	101	86	218		1160	1565
160	**125**	101	91	208	735	1155	1645
160	**140**	101	92	206	835	1235	1780
180	**90**	110	90	260	■	■	
180	**125**	107	88	220	1040	1515	
180	**140**	105	96	221	1060	1610	
180	**140**	130	100	245			2300
180	**160**	107	101	224	1165	1725	
180	**160**	130	103	245			2700
200	**110**	130	100	275	1300	1900	
200	**140**	115	95	231	1330	1940	
200	**140**	123	100	251			3100
200	**160**	116	101	252	1430	2155	
200	**160**	131	99	250			3100
200	**180**	117	109	236	1460	2300	
200	**180**	126	113	251			3100
225	**90**	125	89	299	1860	■	
225	**125**	130	99	299	1930	■	
225	**160**	132	120	292	2040	3085	
225	**180**	132	125	285	2180	3010	
225	**200**	132	130	277	2380	3465	
250	**160**	135	115	315	2670		
250	**160**	140	120	320		4110	
250	**180**	138	124	304	2700	3950	
250	**200**	140	130	301	2450	4420	
250	**225**	137	134	296	2855	4630	
280	**200**	172	123	340	4800	5400	
280	**225**	168	138	334	4700	5200	
280	**250**	158	148	322	4500	5000	
315	**160**	98 ★	110	351	3800	5690	
315	**200**	170	130	388	5100	7700	
315	**225**	173	138	389	5180	8030	
315	**250**	173	150	381	5200	8250	
315	**280**	164	164	346	6000	7600	
355	**250**				●	●	
355	**280**				●	●	
355	**315**				●	●	
400	**280**				●	●	
400	**315**				●	●	
400	**355**				●	●	

● on request ■ in preparation

★ size diam. 315 with short collar

_ Moulded in PE 100 with long collar
_ Buttfusion unadvised for diam. < 63 mm

TRANSITION FITTINGS

STEEL/PE COUPLING // STEEL/PE COUPLING WITH EXTENSION AND THREAD //
COPPER/PE COUPLING // EF TRANSITION SOCKET //
TRANSITION INSERT // EF TRANSITION 90° AND 45° ELBOW //
EF TRANSITION SOCKET WITH FREE NUT //
EF TRANSITION 90° AND 45° ELBOW WITH FREE NUT //
EF TRANSITION SPIGOT SADDLE //
EF SPIGOT SADDLE FOR SHUT-OFF EQUIPMENT //
STEEL PP COVERED FLANGE // ALUMINIUM FLANGE // STEEL FLANGE //
BLANK STEEL FLANGE // STUB END/PP FLANGE SYSTEM //

COD. 20.60
STEEL/PE COUPLING
SDR 11 – PN 16

type A

type F

type H

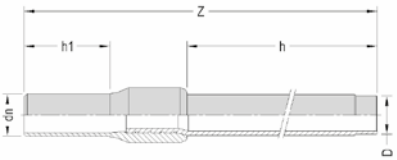

CLEARLY SPECIFY THE REQUESTED VERSION

_ 20.60 A galvanized
_ 20.60 F galvanized with thread
_ 20.60 H galvanized coated with thread

		DIMENSIONS					WEIGHTS		
dn	D	STEEL EXTERNAL DIAMETER	STEEL THICKNESS	h	h1	Z	TYPE A	TYPE F	TYPE H
25	¾''	26,9	2,6	300	97	495	635	635	640
32	1''	33,7	3,2	300	103	499	945	945	1005
40	1'' ¼	42,4	3,2	300	106	508	1220	1220	1250
50	1'' ½	48,3	3,2	300	117	516	1430	1430	1545
63	2''	60,3	3,6	300	135	545	2120	2120	2270
75	2'' ½	76,1	3,6	300	165	580	2900	2900	3000
90	3''	88,9	4,0	300	162	590	3450	3450	3860
110	4''	114,3	4,5	300	203	635	5650	5650	5980
125	4''	114,3	4,5	300	205	630	5950	5950	6180

_ Do not cut the steel part as it could origin deformations on PE collar due to overheating
_ Suitable for gas and water pipelines
_ Steel pipe according to UNI EN ISO 3183 and galvanized according to UNI EN 10240 A.1 ("lead free galvanized pipe")
_ On request type galvanized coated pipe for welding
_ Buttfusion unadvised for diam < 63 mm

COD. 20.65

STEEL/PE COUPLING

SDR 11 - PN 16

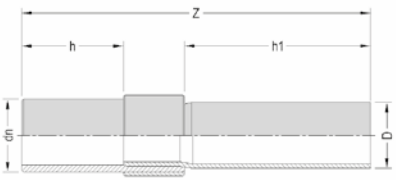

DIMENSIONS							WEIGHTS
dn	D	STEEL EXTERNAL DIAMETER	STEEL THICKNESS	h	h1	Z	
140	5''	139,7	4,8	310	240	690	13205
160	6''	168,3	4,8	310	270	720	10500
180	6''	168,3	4,8	310	270	720	18065
200	8''	219,1	6,4	310	310	785	16500
225	8''	219,1	6,4	310	310	785	29800
250	10''	273,0	6,3	310	310	800	24100
280	10''	273,0	5,6				•
315	10''	273,0	5,6				•
315	12''	323,9	6,3				•

• on request

_ Suitable for gas and water pipelines
_ Steel pipe according to UNI EN 10208-1 or API 5L gr. B and galvanized according to UNI EN 10240 A.1 ("lead free galvanized pipe")
_ Galvanizing removed on the welding end

COD. 20.61
STEEL/PE COUPLING WITH EXTENSION AND THREAD
SDR 11 – PN 16

type A

type R

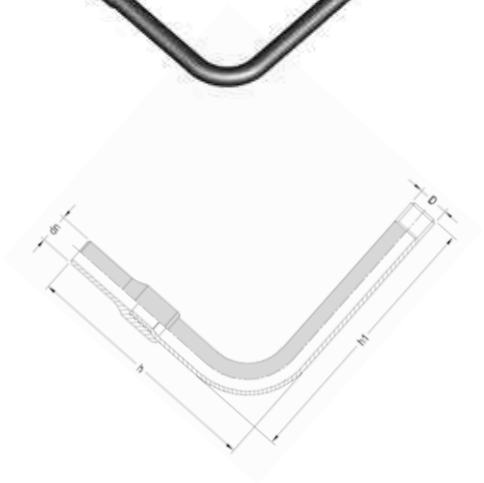

CLEARLY SPECIFY THE REQUESTED VERSION

_ 20.61 A galvanized
_ 20.61 R galvanized coated

	DIMENSIONS					WEIGHTS	
dn	D	STEEL EXTERNAL DIAMETER	STEEL THICKNESS	h	h1	TYPE A	TYPE R
25	¾''	26,9	2,6	520	820	1720	2020
32	1''	33,7	3,2	530	825	2750	2900
40	1'' ¼	42,4	3,2	555	835	3120	3500
50	1'' ½	48,3	3,2	640	760	3850	4450
63	2''	60,3	3,6	780	700	5800	6150

_ Steel pipe according to UNI EN ISO 3183 and galvanized according to UNI EN 10240 A.1 ("lead free galvanized pipe")
_ Suitable for gas and water pipelines
_ Buttfusion unadvised for diam < 63 mm
_ For gas networks according to standard UNI 7129-1
_ On request type for welding

COD. 20.62

COPPER/PE COUPLING

SDR 11 - PN 16

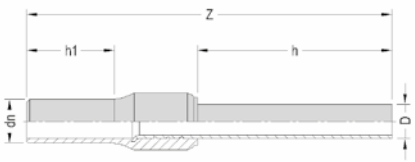

DIMENSIONS						WEIGHTS
dn	D	COPPER THICKNESS	h	h1	Z	
25	18	1,5	300	97	495	335
25	22	1,5	300	97	495	375
32	22	1,5	300	103	500	425
32	28	1,5	300	103	500	490

_ Copper pipe according to standard UNI EN 1057
_ Suitable for gas and water pipelines
_ Buttfusion welding unadvised
_ For gas networks according to standard UNI 7129-1

COD. 21.61 - COD. 21.62

ELECTROFUSION TRANSITION SOCKET

WITH BRASS INSERT

MALE SDR 7,4 - PN 25

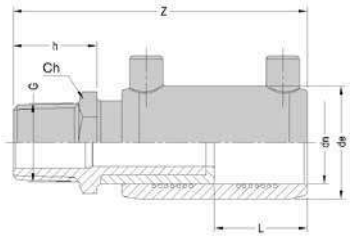

	DIMENSIONS						WEIGHTS
dn	G	de	L	h	Z	Ch	
20	½''	33	33	20	96	22	75
25	¾''	38	33	21	97	27	100
32	1''	46	38	26	111	34	229
40	1'' ¼	56	44	29	124	42	363
50	1'' ½	68	49	33	139	52	532
63	2''	82	54	37	158	65	889
75	2'' ½	99	60	43	173	86	1431
90	3''	116	65	46	190	97	2085
110	4''	145	70	52	204	125	3110

Ch = tightening key size

	WELDABILITY ON PIPE/FITTING PE 100			
dn	SDR 17	SDR 11	SDR 9	SDR 7,4
20		● ▲	● ▲	●
25		● ▲	●	●
32	● ▲	●	●	●
40	● ▲	●	●	●
50	●	●	●	●
63	●	●	●	●
75	●	●	●	●
90	●	●	●	●
110	●	●	●	●

● weldable only with monovalent welding units Series Euro
▲ minimum weldable thickness 3 mm

FEMALE SDR 7,4 - PN 25

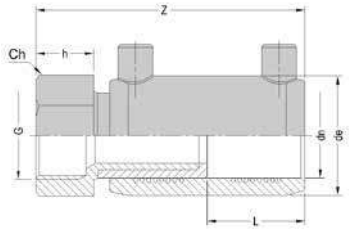

	DIMENSIONS						WEIGHTS
dn	G	de	L	h	Z	Ch	
20	½''	33	33	18	94	27	136
25	¾''	38	33	20	96	34	186
32	1''	46	38	22	107	40	256
40	1'' ¼	56	44	27	122	50	465
50	1'' ½	68	49	27	133	55	560
63	2''	82	54	33	154	67	882
75	2'' ½	99	60	39	169	86	1445
90	3''	116	65	42	186	97	1990
110	4''	145	70	48	200	125	3170

Ch = tightening key size

	WELDABILITY ON PIPE/FITTING PE 100			
dn	SDR 17	SDR 11	SDR 9	SDR 7,4
20		● ▲	● ▲	●
25		● ▲	●	●
32	● ▲	●	●	●
40	● ▲	●	●	●
50	●	●	●	●
63	●	●	●	●
75	●	●	●	●
90	●	●	●	●
110	●	●	●	●

● weldable only with monovalent welding units Series Euro
▲ minimum weldable thickness 3 mm

_ During the screwing, lock the metallic hexagon to avoid any stress on the PE part
_ Suitable for gas and water pipelines
_ Do not remove the insert

COD. 21.77 – COD. 21.78

TRANSITION INSERT
IN BRASS

MALE SDR 7,4 – PN 25

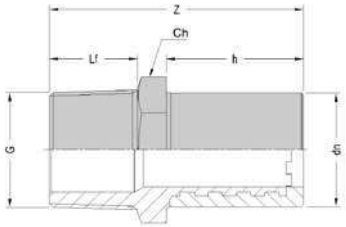

	DIMENSIONS					WEIGHTS
dn	G	Lf	h	Z	Ch	
20	½''	15	41	61	22	30
25	¾''	16	41	62	27	45
32	1''	19	44	70	34	140
40	1'' ¼	21	49	78	42	250
50	1'' ½	23	55	88	52	377
63	2''	26	63	100	65	650
75	2'' ½	31	70	113	86	1060
90	3''	34	79	125	97	1595
110	4''	40	82	134	125	2240

Ch = tightening key size

FEMALE SDR 7,4 – PN 25

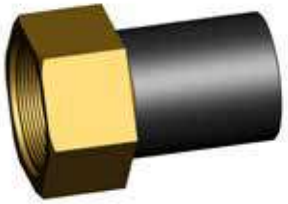

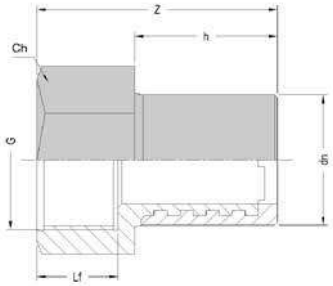

	DIMENSIONS					WEIGHTS
dn	G	Lf	h	Z	Ch	
20	½''	15	41	59	27	100
25	¾''	17	41	61	34	130
32	1''	19	44	66	40	180
40	1'' ¼	21	49	76	50	345
50	1'' ½	21	55	82	55	405
63	2''	28	63	96	67	660
75	2'' ½	34	70	109	86	1070
90	3''	37	79	121	97	1500
110	4''	43	82	130	125	2310

Ch = tightening key size

- Weldable with electrofusion EURO fittings, in case of use with other brand fittings, please contact EUROSTANDARD in advance
- Extension of the metallic overmoulded part on the whole length
- Suitable for gas and water pipelines
- Measure and respect the insertion depth inside the electrofusion fitting
- Weld only using electrofusion fittings
- Scraping of the PE end is compulsory
- During the screwing, lock the metallic hexagon to avoid any stress on the PE part

COD. 21.65 - COD. 21.66

ELECTROFUSION TRANSITION 90° ELBOW

WITH BRASS INSERT

MALE SDR 7,4 - PN 25

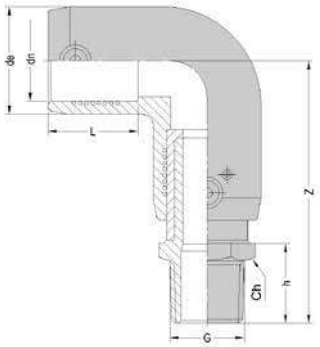

	DIMENSIONS						WEIGHTS
dn	G	de	L	h	Z	Ch	
20	½''	34	33	20	81	22	105
25	¾''	38	33	21	83	27	125
32	1''	46	39	26	106	34	285
40	1'' ¼	56	48	29	114	42	455
50	1'' ½	68	54	33	129	52	705
63	2''	83	52	37	151	65	1120
75	2'' ½	97	64	43	169	86	1725
90	3''	116	70	46	190	97	2635
110	4''	142	76	52	210	125	3865

Ch = tightening key size

	WELDABILITY ON PIPE/FITTING PE 100			
dn	SDR 17	SDR 11	SDR 9	SDR 7,4
20		● ▲	● ▲	●
25		● ▲	●	●
32	● ▲	●	●	●
40	● ▲	●	●	●
50	●	●	●	●
63	●	●	●	●
75	●	●	●	●
90	●	●	●	●
110	●	●	●	●

● weldable only with monovalent welding units Series Euro
▲ minimum weldable thickness 3 mm

FEMALE SDR 7,4 - PN 25

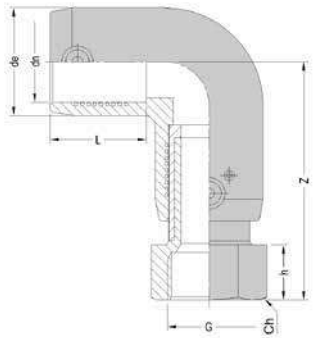

	DIMENSIONS						WEIGHTS
dn	G	de	L	h	Z	Ch	
20	½''	34	33	18	79	27	160
25	¾''	38	33	20	82	34	220
32	1''	46	39	22	102	40	310
40	1'' ¼	56	48	27	111	50	525
50	1'' ½	68	54	27	121	55	735
63	2''	83	52	33	147	67	1105
75	2'' ½	97	64	39	165	86	1735
90	3''	116	70	42	186	97	2575
110	4''	142	76	48	206	125	4125

Ch = tightening key size

	WELDABILITY ON PIPE/FITTING PE 100			
dn	SDR 17	SDR 11	SDR 9	SDR 7,4
20		● ▲	● ▲	●
25		● ▲	●	●
32	● ▲	●	●	●
40	● ▲	●	●	●
50	●	●	●	●
63	●	●	●	●
75	●	●	●	●
90	●	●	●	●
110	●	●	●	●

● weldable only with monovalent welding units Series Euro
▲ minimum weldable thickness 3 mm

_ During the screwing, lock the metallic hexagon to avoid any stress on the PE part
_ Suitable for gas and water pipelines
_ Do not remove the insert

COD. 21.67 - COD. 21.68

ELECTROFUSION TRANSITION 45° ELBOW

WITH BRASS INSERT

MALE SDR 7,4 - PN 25

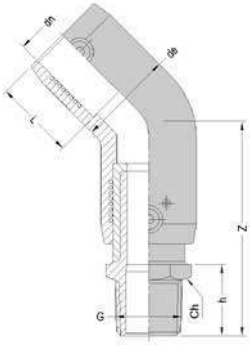

	DIMENSIONS						WEIGHTS
dn	G	de	L	h	Z	Ch	
25	¾''	39	33	21	76	27	125
32	1''	46	39	26	88	34	260
40	1'' ¼	56	48	29	104	42	425
50	1'' ½	68	54	33	114	52	650
63	2''	82	52	37	133	65	1050
75	2'' ½	97	64	43	151	86	1680
90	3''	116	70	46	170	97	2500
110	4''	142	76	52	178	125	3630

Ch = tightening key size

	WELDABILITY ON PIPE/FITTING PE 100			
dn	SDR 17	SDR 11	SDR 9	SDR 7,4
25		● ▲	●	●
32	● ▲	●	●	●
40	● ▲	●	●	●
50	●	●	●	●
63	●	●	●	●
75	●	●	●	●
90	●	●	●	●
110	●	●	●	●

● weldable only with monovalent welding units Series Euro
▲ minimum weldable thickness 3 mm

FEMALE SDR 7,4 - PN 25

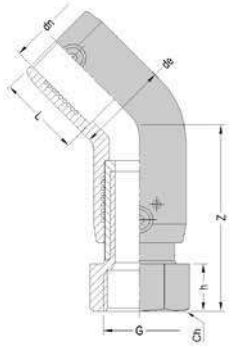

	DIMENSIONS						WEIGHTS
dn	G	de	L	h	Z	Ch	
25	¾''	39	33	20	75	34	210
32	1''	46	39	22	84	40	300
40	1'' ¼	56	48	27	101	50	520
50	1'' ½	68	54	27	108	55	685
63	2''	82	52	33	129	67	1030
75	2'' ½	97	64	39	147	86	1725
90	3''	116	70	42	166	97	2405
110	4''	142	76	48	174	125	3725

Ch = tightening key size

	WELDABILITY ON PIPE/FITTING PE 100			
dn	SDR 17	SDR 11	SDR 9	SDR 7,4
25		● ▲	●	●
32	● ▲	●	●	●
40	● ▲	●	●	●
50	●	●	●	●
63	●	●	●	●
75	●	●	●	●
90	●	●	●	●
110	●	●	●	●

● weldable only with monovalent welding units Series Euro
▲ minimum weldable thickness 3 mm

_ During the screwing, lock the metallic hexagon to avoid any stress on the PE part
_ Suitable for gas and water pipelines
_ Do not remove the insert

COD. 21.70

ELECTROFUSION TRANSITION SOCKET

WITH BRASS INSERT AND FREE NUT

SDR 7.4 – PN 25

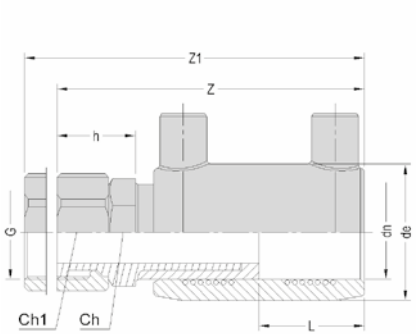

			DIMENSIONS						WEIGHTS
dn	**G**	**de**	**L**	**h**	**Z**	**Z1**	**Ch**	**Ch1**	
20	½''	33	33	22	98	108	22	27	110
25	¾''	38	33	22	98	108	27	30	132
32	1''	46	38	27	112	120	32	36	270
40	1'' ¼	56	44	30	125	141	42	50	313
50	1'' ½	68	49	32	137	152	52	58	495
63	2''	82	54	39	160	183	65	67	805

Ch, Ch1 = tightening key size

	WELDABILITY ON PIPE/FITTING PE 100			
dn	**SDR 17**	**SDR 11**	**SDR 9**	**SDR 7,4**
20		● ▲	● ▲	●
25		● ▲	●	●
32	● ▲	●	●	●
40	● ▲	●	●	●
50	●	●	●	●
63	●	●	●	●

● weldable only with monovalent welding units Series Euro
▲ minimum weldable thickness 3 mm

_ During the screwing, lock the metallic hexagon to avoid any stress on the PE part
_ Suitable for gas and water pipelines
_ Do not remove the insert

COD. 21.71

ELECTROFUSION TRANSITION 90° ELBOW

WITH BRASS INSERT AND FREE NUT

SDR 7,4 – PN 25

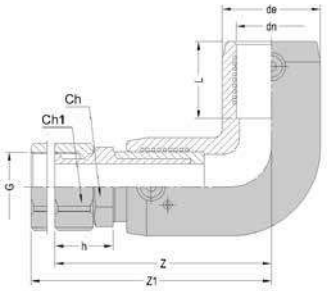

DIMENSIONS									WEIGHTS
dn	G	de	L	h	Z	Z1	Ch	Ch1	
25	¾"	38	33	22	84	94	27	30	200
32	1"	46	39	27	106	114	32	36	262
40	1"¼	56	48	30	114	130	42	50	393
50	1"½	68	54	32	126	141	52	58	640
63	2"	83	52	39	153	176	65	67	1030

Ch, Ch1 = tightening key size

WELDABILITY ON PIPE/FITTING PE 100				
dn	SDR 17	SDR 11	SDR 9	SDR 7,4
25		● ▲	●	●
32	● ▲	●	●	●
40	● ▲	●	●	●
50	●	●	●	●
63	●	●	●	●

● weldable only with monovalent welding units Series Euro
▲ minimum weldable thickness 3 mm

COD. 21.72

ELECTROFUSION TRANSITION 45° ELBOW

WITH BRASS INSERT AND FREE NUT

SDR 7,4 – PN 25

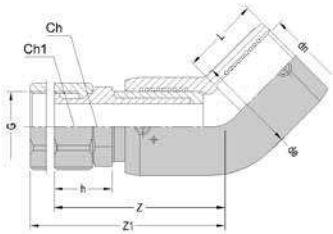

DIMENSIONS									WEIGHTS
dn	G	de	L	h	Z	Z1	Ch	Ch1	
32	1"	46	39	27	89	97	32	36	242
40	1"¼	56	48	30	104	120	42	50	378
50	1"½	68	54	32	112	127	52	58	600
63	2"	82	52	39	135	158	65	67	970

Ch, Ch1 = tightening key size

WELDABILITY ON PIPE/FITTING PE 100				
dn	SDR 17	SDR 11	SDR 9	SDR 7,4
32	● ▲	●	●	●
40	● ▲	●	●	●
50	●	●	●	●
63	●	●	●	●

● weldable only with monovalent welding units Series Euro
▲ minimum weldable thickness 3 mm

_ During the screwing, lock the metallic hexagon to avoid any stress on the PE part
_ Suitable for gas and water pipelines
_ Do not remove the insert

COD. 21.63

ELECTROFUSION TRANSITION SPIGOT SADDLE

WITH BRASS INSERT

SDR 11 – PN 16

FEMALE

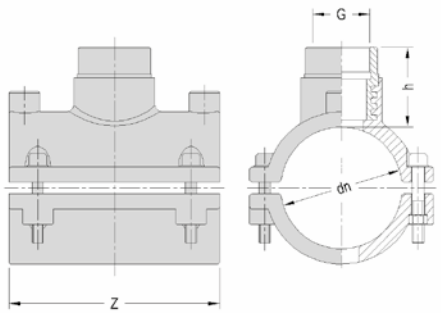

	DIMENSIONS			WEIGHTS
dn	G	h	Z	
110	1'' ½	50	160	1300
110	2''	71	160	1555
125	1'' ½	47	160	1415
125	2''	68	160	1680
140	1'' ½	47	160	1565
140	2''	68	160	1850
160	1'' ½	50	160	1750
160	2''	72	160	2020

	WELDABILITY ON PIPE/FITTING PE 100		
dn	SDR 26	SDR 17	SDR 11
110x		●	●
125x		●	●
140x		●	●
160x	●	●	●

● weldable only with monovalent welding units Series Euro

_ During the screwing, avoid any stress on the PE part
_ Suitable for gas and water pipelines

COD. 21.64

ELECTROFUSION SPIGOT SADDLE FOR SHUT-OFF EQUIPMENT

WITH BRASS INSERT

SDR 11 - PN 16

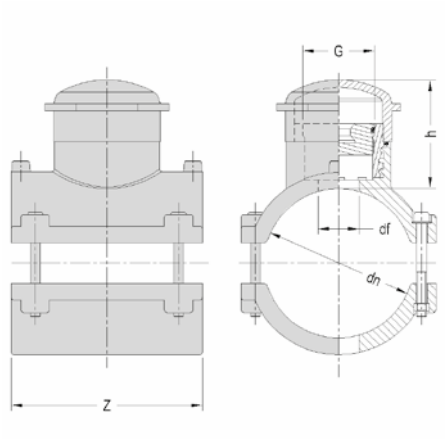

DIMENSIONS					WEIGHTS
dn	G	h	df	Z	
110	2"	90	54	160	2200
125	2"	91	54	160	2315
140	2"	92	54	160	2465
160	2"	93	54	160	2655

df = maximum thickness pipe boring

	WELDABILITY ON PIPE/FITTING PE 100	
dn	SDR 17	SDR 11
110x	•	•
125x	•	•
140x	•	•
160x	•	•

- Suitable for gas pipeline
- Brass closing cap with hexagonal key
- Suitable for all normal commercial shut-off equipment
- PVC external cap with O-ring seal

COD. 20.49

STEEL FLANGE COVERED PP

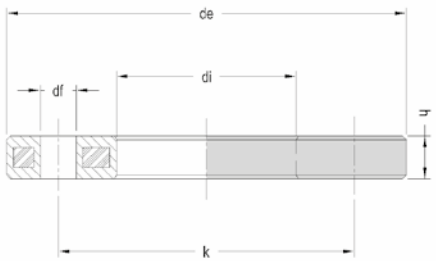

			DIMENSIONS						WEIGHTS	
dn	D STEEL	de	k	h	di	df	HOLES N.	PN	PN 10	PN 16
25	20	105	75	12	34	14	4	PN10/16	308	
32	25	115	85	16	42	14	4	PN10/16	555	
40	32	140	100	18	51	18	4	PN10/16	700	
50	40	150	110	18	62	18	4	PN10/16	810	
63	50	165	125	18	78	18	4	PN10/16	1090	
75	65	188	145	18	92	18	4	PN10/16	1380	
90	80	204	160	20	108	18	8	PN10/16	1310	
110	100	224	180	20	128	18	8	PN10/16	1370	
125	100	224	180	20	135	18	8	PN10/16	1370	
140	125	252	210	24	158	18	8	PN10/16	2060	
160	150	285	240	24	178	22	8	PN10/16	2840	
180	150	285	240	24	188	22	8	PN10/16	2800	
200	200	340	295	26	235	22	8	PN10	3470	
225	200	340	295	26	238	22	8	PN10	3520	
250	250	395	350	29	288	22	12	PN10	5100	
280	250	395	350	29	294	22	12	PN10	4170	
315	300	445	400	33	338	22	12	PN10	7360	
355	350	514	460	50	376	22	16	PN10	19972	
400	400	571	515	54	430	26	16	PN10	21500	
450	450/500	678	620	45	517	26	20	PN10	•	
500	500	688	620	45	533	26	20	PN10	•	
560	600	799	725	50	618	30	20	PN10	•	
630	600	799	725	50	645	30	20	PN10	•	
200	200	340	295	26	235	22	12	PN16		4500
225	200	340	295	26	238	22	12	PN16		4500
250	250	419	355	32	288	26	12	PN16		4780
280	250	419	355	32	294	26	12	PN16		4700
315	300	478	410	33	338	26	12	PN16		8150
355	350	532	470	50	376	26	16	PN16		26000
400	400	592	525	54	430	30	16	PN16		28080

• on request

_ Flanges according to standard DIN 16963-4 and internal diameter according to standard ISO 9624
_ The pipeline diameter identifies the choice of the flange

COD. 20.40

ALUMINIUM FLANGE

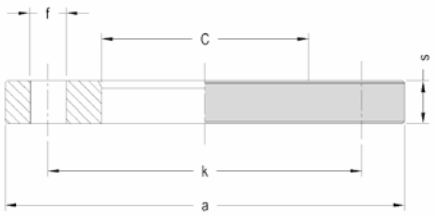

	DIMENSIONS								WEIGHTS	
dn	D ALUMINIUM	C	s	a	k	f	HOLES N.	PN	PN 10	PN 16
25	20	38	12	105	75	14	4	PN 10/16	250	
32	25	45	12	115	85	14	4	PN 10/16	250	
40	32	55	16	140	100	18	4	PN 10/16	500	
50	40	66	16	150	110	18	4	PN 10/16	550	
63	50	78	20	165	125	18	4	PN 10/16	690	
75	65	92	20	185	145	18	4	PN 10/16	880	
90	80	108	22	200	160	18	8	PN 10/16	980	
110	100	128	22	220	180	18	8	PN 10/16	1130	
125	100	135	22	220	180	18	8	PN 10/16	1030	
140	125	158	22	250	210	18	8	PN 10/16	1350	
160	150	178	24	285	240	22	8	PN 10/16	1820	
180	150	188	24	285	240	22	8	PN 10/16	1640	
200	200	235	26	340	295	22	8	PN10	2300	
225	200	238	26	340	295	22	8	PN10	2250	
250	250	288	28	395	350	22	12	PN10	3030	
280	250	294	28	395	350	22	12	PN10	2840	
315	300	338	28	445	400	22	12	PN10	3500	
355	350	376	22	505	460	22	16	PN10	3500	
400	400	430	25	565	515	25	16	PN10	6500	
450	500	533	28	670	620	25	20	PN10	•	
500	500	533	28	670	620	25	20	PN10	•	
560	600	633	30	780	725	30	20	PN10	•	
630	600	645	30	780	725	30	20	PN10	•	
200	200	235	26	340	295	22	12	PN16		2420
225	200	238	26	340	295	22	12	PN16		2310
250	250	288	28	405	355	25	12	PN16		3500
280	250	294	28	405	355	25	12	PN16		3420
315	300	338	32	460	410	25	12	PN16		5000

not reinforced

• on request

_ According to standard ISO 9624
_ Flanges suitable both PN 10 and PN 16 up to diam 180 mm, for larger diameters they are different for holes number, thickness and distance between holes
_ The pipeline diameter identifies the choice of the flange

COD. 20.45
STEEL FLANGE

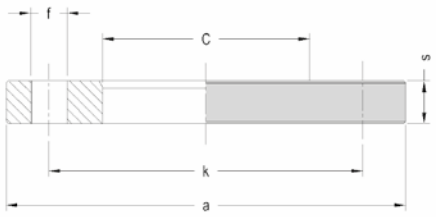

			DIMENSIONS													WEIGHTS		
			s			a			k			f						
dn	D STEEL	C	PN 10	PN 16	PN 25	PN 10	PN 16	PN 25	PN 10	PN 16	PN 25	PN 10	PN 16	PN 25	HOLES N.	PN 10	PN 16	PN 25
32	25	45	16	16	16	115	115	115	85	85	85	14	14	14	4	•	•	•
40	32	55	18	18	18	140	140	140	100	100	100	18	18	18	4	•	•	•
50	40	66	18	18	18	150	150	150	110	110	110	18	18	18	4	•	•	•
63	50	78	20	20	20	165	165	165	125	125	125	18	18	18	4	•	•	•
75	65	92	20	20	22	185	185	185	145	145	145	18	18	18	4	•	•	3000
90	80	108	20	20	24	200	200	200	160	160	160	18	18	18	8	•	•	4000
110	100	128	22	22	26	220	220	235	180	180	190	18	18	22	8	•	•	5300
125	100	135	22	22	26	220	220	235	180	180	190	18	18	22	8	•	•	5300
140	125	158	22	22	28	250	250	270	210	210	220	18	18	26	8	•	•	7400
160	150	178	24	24	30	285	285	300	240	240	250	22	22	26	8	•	•	8900
180	150	188	24	24	30	285	285	300	240	240	250	22	22	26	8	•	•	10000
200	200	235	24	26	32	340	340	360	295	295	310	22	22	26	8	8410	8790	12000
225	200	238	24	26	32	340	340	360	295	295	310	22	22	26	8	8200	8570	12000
250	250	288	26	29	35	395	405	425	350	355	370	22	26	30	12	10840	13220	18000
280	250	294	26	29	35	395	405	425	350	355	370	22	26	30	12	10280	12590	20000
315	300	338	26	32	38	445	460	485	400	410	430	22	26	30	12	12560	17810	24000
355	350	376	30	35		505	520		460	470		22	26		16	12560	25430	
400	400	430	32	38		565	580		515	525		26	30		16	38000	44000	
450	450/500															•	•	
500	500															•	•	
560	600															•	•	
630	600															•	•	

• on request

_ According to standard UNI EN 1092-1
_ Internal diameter according to standard ISO 9624
_ Flanges suitable both PN 10 and PN 16 up to diam 180 mm, for larger diameters they are different for holes number, thickness and distance between holes
_ The pipeline diameter identifies the choice of the flange

COD. 20.46

BLANK STEEL FLANGE

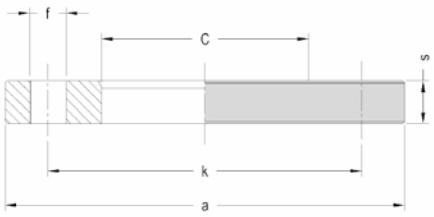

	DIMENSIONS							WEIGHTS
dn	D STEEL	s	a	k	f	HOLES N.	PN	
32	25	16	115	85	14	4	PN 10/16	1200
40	32	16	140	100	18	4	PN 10/16	1800
50	40	16	150	110	18	4	PN 10/16	2100
63	50	18	165	125	18	4	PN 10/16	2900
75	65	18	185	145	18	4	PN 10/16	3600
90	80	20	200	160	18	8	PN 10/16	4500
110/125	100	20	220	180	18	8	PN 10/16	5100
140	125	22	250	210	18	8	PN 10/16	6700
160/180	150	22	285	240	22	8	PN 10/16	8500
200/225	200	24	340	295	22	8	PN 10	13700
250/280	250	26	395	350	22	12	PN 10	20600
315	300	26	445	400	22	12	PN 10	30600

According to standard UNI EN 1092-1

COD. 20.47
STUB END/PP FLANGE SYSTEM

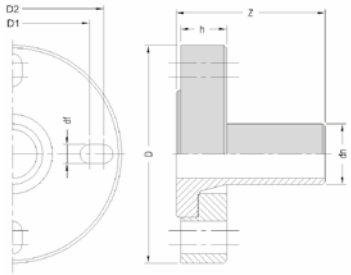

type A - stub end and PP flange

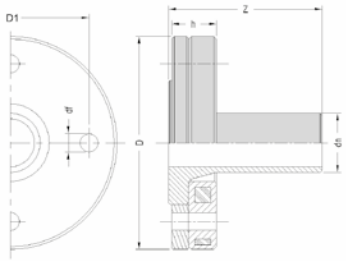

type B - stub end, steel-PP covered flange and PP ring

		DIMENSIONS									WEIGHTS
dn	**D STEEL**	**D**	**D1**	**D2**	**h**	**Z**	**df**	**HOLES N.**	**PN**	**TYPE**	
40	32/40	150	100	110	24	87	18	4	PN16	A	320
50	40/50	165	110	125	28	95	18	4	PN16	A	430
63	50/60/65	183	125	145	30	94	18	4	PN16	A	590
75	60/65/80	198	135	160	33	107	18	8	PN16	A	780
90	80	198	160		33	113	18	8	PN16	A	875
110	100	219	180		35	128	18	8	PN16	A	1135
125	100	220	180		35	153	18	8	PN16	A	1365
140	125	252	210		48	156	18	8	PN16	B	4191
160	150	285	240		53	159	22	8	PN16	B	5501
180	150	285	240		53	196	22	8	PN16	B	5880
200	200	340	295		58	182	22	12	PN16	B	7641
225	200	340	295		58	319	22	12	PN16	B	8931
250	250	419	355		66	205	26	12	PN16	B	11425
280	250	419	355		66	235	26	12	PN16	B	11700
315	300	478	410		68	275	26	12	PN16	B	19450
200	200	340	295		58	182	22	8	PN10	B	7331
225	200	340	295		58	219	22	8	PN10	B	7831
250	250	395	350		64	205	22	12	PN10	B	11430
280	250	395	350		64	235	22	12	PN10	B	10500
315	300	445	400		68	275	22	12	PN10	B	18460

stub end complete with NBR gasket

_ For the correct assembling use NBR gaskets
_ Maximum tightness guarantee
_ No deformation
_ Tightening of the thread bar/bolts according to cross sequence

ELECTROFUSION FITTINGS

SOCKET // 90° ELBOW // 45° ELBOW //
90° TEE // 90° REDUCED TEE // CAP // REDUCER //
SPIGOT SADDLE // TAPPING SADDLE //
TAPPING SADDLE WITH VALVE //

COD. 21.00.10

ELECTROFUSION SOCKET

SDR 17 - PN 10

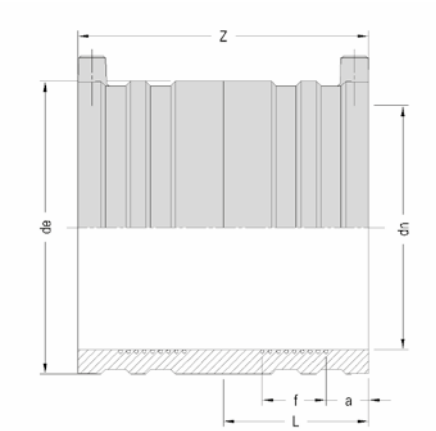

DIMENSIONS						WEIGHTS
dn	de	L	f	a	Z	
32	46	38	19	12	80	75
40	56	44	22	13	90	110
50	68	49	23	14	100	155
63	82	54	26	18	111	225
110	137	70	36	18	140	680
125	153	76	39	18	152	1060
160	198	86	39	22	172	1520
180	223	100	41	25	200	2120
200	233	106	41	32	212	2000
225	262	114	41	34	227	2800
250	292	122	45	41	244	3900
280	341	133	42	44	265	7100
315	369	138	47	44	275	7000
355	430	156	40	47	312	11750
400	461	170	60	41	340	14150

	WELDABILITY ON PIPE/FITTING PE 100		
dn	SDR 33	SDR 26	SDR 17
32			●
40			●
50			●
63			●
110		●	●
125		●	●
160		●	●
180		●	●
200	●	●	●
225	●	●	●
250	●	●	●
280	●	●	●
315	●	●	●
355	●	●	●
400	●	●	●

● weldable only with:
- universal ef units
- monovalent ef unit Series Euro S1 plus
- monovalent ef unit Series Euro S1 prior updating

● weldable only with monovalent welding units Series Euro

_ Moulded in PE 100-RC
_ Absolutely compulsory the use of aligning clamp for all diameters
_ Absolutely compulsory the pipes/fittings scraping

COD. 21.00.16

ELECTROFUSION SOCKET

SDR 11 – PN 16

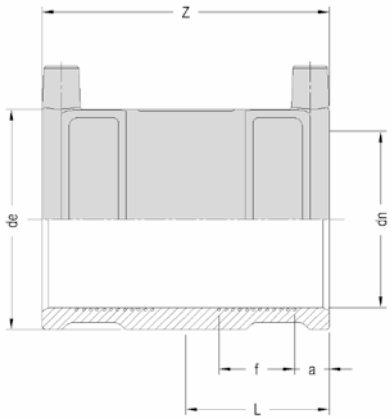

	DIMENSIONS					WEIGHTS
dn	de	L	f	a	Z	
20	33	33	15	13	70	45
25	38	33	15	12	70	55
32	46	38	19	12	80	75
40	56	44	22	13	90	110
50	68	49	23	14	100	155
63	82	54	26	18	111	225
75	93	60	32	18	121	260
90	113	65	31	20	131	420
110	137	70	32	22	140	630
125	152	76	38	18	152	820
140	170	80	49	17	161	1060
160	198	86	45	22	172	1520
180	223	100	51	25	200	2120
200	245	105	43	32	210	3020
225	277	112	48	36	225	3980
250	305	122	53	33	244	5430
280	341	133	55	38	265	7100
315	391	138	51	47	277	10620
355	430	156	60	45	312	11750
400	492	172	53	64	344	20056

	WELDABILITY ON PIPE/FITTING PE 100		
dn	SDR 26	SDR 17	SDR 11
20			● ▲
25			● ▲
32		● ▲	●
40		● ▲	●
50		●	●
63		●	●
75		●	●
90	●	●	●
110	●	●	●
125	●	●	●
140	●	●	●
160	●	●	●
180	●	●	●
200	●	●	●
225	●	●	●
250	●	●	●
280	●	●	●
315	●	●	●
355	●	●	●
400	●	●	●

_ Moulded in PE 100-RC
_ Absolutely compulsory the use of aligning clamp for all diameters
_ Absolutely compulsory the pipes/fittings scraping

● weldable only with:
- universal ef units
- monovalent ef unit Series Euro S1 plus
- monovalent ef unit Series Euro S1 prior updating

● weldable only with monovalent welding units Series Euro

▲ minimum weldable thickness 3 mm

COD. 21.10.10

ELECTROFUSION SOCKET

SDR 13,6 – PN 12,5

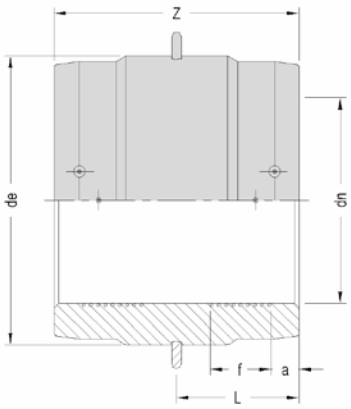

	DIMENSIONS					WEIGHTS
dn	de	L	f	a	Z	
450	527	175	59	45	350	20000
500	585	179	76	47	359	22000
560	656	195	90	50	390	32200
630	736	210	99	50	420	46850

Supplied with pre-pulled belts
(no need of regulation)
to avoid any expansion

	WELDABILITY ON PIPE/FITTING PE 100		
dn	SDR 26	SDR 17	SDR 11
450	•	•	•
500	•	•	•
560	•	•	•
630	•	•	•

• weldable only with:
- universal ef units
- monovalent ef unit Series Euro S1 plus
- monovalent ef unit Series Euro S1 prior updating

_ Moulded in PE 100-RC
_ EF SOCKET d. 500 – 560 – 630 mm: two separate fusion zones and electrically independent
_ Absolutely compulsory the use of aligning clamp for all diameters
_ Absolutely compulsory the pipes/fittings scraping

ON REQUEST ELECTROFUSION SOCKET VERSION SDR 11 – PN 16

COD. 21.00.25

ELECTROFUSION SOCKET

SDR 7,4 – PN 25

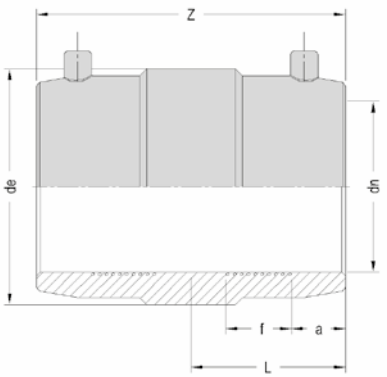

	DIMENSIONS					WEIGHTS
dn	de	L	f	a	Z	
20	33	33	15	13	70	45
25	38	33	15	12	70	55
32	46	38	19	12	80	75
40	56	44	22	13	90	110
50	68	49	23	14	100	155
63	82	54	26	18	111	225
75	99	60	36	14	120	330
90	116	65	37	14	130	490
110	145	70	36	18	140	800
125	163	76	39	18	151	1060
140	183	81	48	18	161	1440
160	207	86	53	20	172	1855
180	240	96	51	27	193	3100
200	265	101	50	31	203	4100
225	301	111	60	29	223	5850
250	332	122	54	38	243	6550
315	416	142	64	43	283	12400

	WELDABILITY ON PIPE/FITTING PE 100				
dn	SDR 26	SDR 17	SDR 11	SDR 9	SDR 7,4
20			● ▲	● ▲	●
25			● ▲	●	●
32		● ▲	●	●	●
40		● ▲	●	●	●
50		●	●	●	●
63		●	●	●	●
75		●	●	●	●
90	●	●	●	●	●
110	●	●	●	●	●
125	●	●	●	●	●
140	●	●	●	●	●
160	●	●	●	●	●
180	●	●	●	●	●
200	●	●	●	●	●
225	●	●	●	●	●
250	●	●	●	●	●
315	●	●	●	●	●

● weldable only with monovalent welding units Series Euro
▲ minimum weldable thickness 3 mm

_ Moulded in PE 100-RC
_ Absolutely compulsory the use of aligning clamp for all diameters
_ Absolutely compulsory the pipes/fittings scraping

COD. 21.11.16

ELECTROFUSION 90° ELBOW

SDR 11 – PN 16

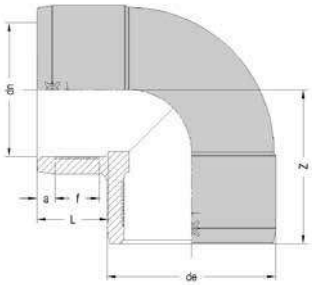

DIMENSIONS						WEIGHTS
dn	de	L	f	a	Z	
20	34	33	15	10	55	75
25	38	33	15	9	57	80
32	46	39	18	10	75	130
40	56	48	25	11	80	190
50	68	54	27	12	89	300
63	83	52	27	13	104	450
75	97	64	29	18	116	665
90	116	70	37	18	130	1040
110	142	76	39	20	146	1615
125	162	79	42	19	152	2130
140	174	85	38	20	166	2700
160	206	89	45	20	180	4050
180	226	116	50	23	215	4800
200	251	118	55	23	229	6450
225	281	120	48	36	251	9300
250	310	127	53	33	272	11600
315	397	145	51	47	321	23000

WELDABILITY ON PIPE/FITTING PE 100		
dn	SDR 17	SDR 11
20		● ▲
25		● ▲
32	● ▲	●
40	● ▲	●
50	●	●
63	●	●
75	●	●
90	●	●
110	●	●
125	●	●
140	●	●
160	●	●
180	●	●
200	●	●
225	●	●
250	●	●
315	●	●

● weldable only with universal ef units
● weldable only with monovalent welding units Series Euro
▲ minimum weldable thickness 3 mm

COD. 21.11.25

ELECTROFUSION 90° ELBOW

SDR 7,4 – PN 25

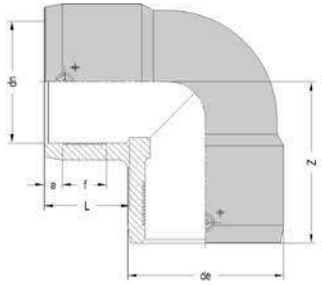

DIMENSIONS						WEIGHTS
dn	de	L	f	a	Z	
20	34	33	15	10	55	75
25	38	33	15	9	57	80
32	46	39	18	10	75	130
40	56	48	25	11	80	190
50	68	54	27	12	89	300
63	83	52	27	13	104	450
75	97	64	29	18	116	665
90	116	70	37	18	130	1040
110	142	76	39	20	146	1615
125	162	79	42	19	152	2130
160	206	89	45	20	180	4050

WELDABILITY ON PIPE/FITTING PE 100				
dn	SDR 17	SDR 11	SDR 9	SDR 7,4
20		● ▲	● ▲	●
25		● ▲	●	●
32	● ▲	●	●	●
40	● ▲	●	●	●
50	●	●	●	●
63	●	●	●	●
75	●	●	●	●
90	●	●	●	●
110	●	●	●	●
125	●	●	●	●
160	●	●	●	●

● weldable only with universal ef units
● weldable only with monovalent welding units Series Euro
▲ minimum weldable thickness 3 mm

_ Moulded in PE 100-RC
_ Absolutely compulsory the use of aligning clamp for all diameters
_ Absolutely compulsory the pipes/fittings scraping

COD. 21.16.16

ELECTROFUSION 45° ELBOW

SDR 11 – PN 16

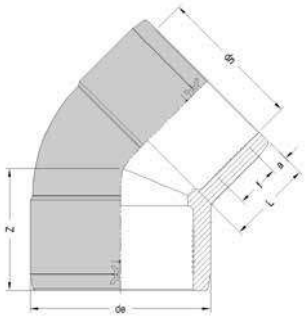

DIMENSIONS						WEIGHTS
dn	de	L	f	a	Z	
25	39	33	15	10	55	80
32	46	39	18	10	57	110
40	56	48	25	11	70	175
50	68	54	27	12	75	260
63	82	52	27	13	86	390
75	97	64	29	18	98	610
90	116	70	37	18	110	905
110	142	76	39	20	114	1415
125	162	79	42	19	119	1830
140	177	86	39	20	134	2200
160	206	89	45	20	134	3400
180	223	105	50	28	165	4300
200	250	112	55	29	171	5300
225	281	120	48	36	185	■
250	310	127	53	33	199	■
315	397	145	51	48	230	■

■ in preparation

WELDABILITY ON PIPE/FITTING PE 100		
dn	SDR 17	SDR 11
25		● ▲
32	● ▲	●
40	● ▲	●
50	●	●
63	●	●
75	●	●
90	●	●
110	●	●
125	●	●
140	●	●
160	●	●
180	●	●
200	●	●
225	●	●
250	●	●
315	●	●

● weldable only with universal ef units
● weldable only with monovalent welding units Series Euro
▲ minimum weldable thickness 3 mm

COD. 21.16.25

ELECTROFUSION 45° ELBOW

SDR 7,4 – PN 25

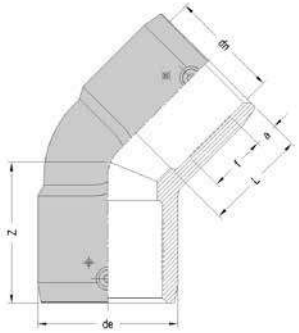

DIMENSIONS						WEIGHTS
dn	de	L	f	a	Z	
25	39	33	15	10	55	80
32	46	39	18	10	57	110
40	56	48	25	11	70	175
50	68	54	27	12	75	260
63	82	52	27	13	86	390
75	97	64	29	18	98	610
90	116	70	37	18	110	905
110	142	76	39	20	114	1415
125	162	79	42	19	119	1830
160	206	89	45	20	134	3400

WELDABILITY ON PIPE/FITTING PE 100				
dn	SDR 17	SDR 11	SDR 9	SDR 7,4
25		● ▲	●	●
32	● ▲	●	●	●
40	● ▲	●	●	●
50	●	●	●	●
63	●	●	●	●
75	●	●	●	●
90	●	●	●	●
110	●	●	●	●
125	●	●	●	●
160	●	●	●	●

● weldable only with universal ef units
● weldable only with monovalent welding units Series Euro
▲ minimum weldable thickness 3 mm

_ Moulded in PE 100-RC
_ Absolutely compulsory the use of aligning clamp for all diameters
_ Absolutely compulsory the pipes/fittings scraping

COD. 21.21.16

ELECTROFUSION 90° TEE

SDR 11 – PN 16

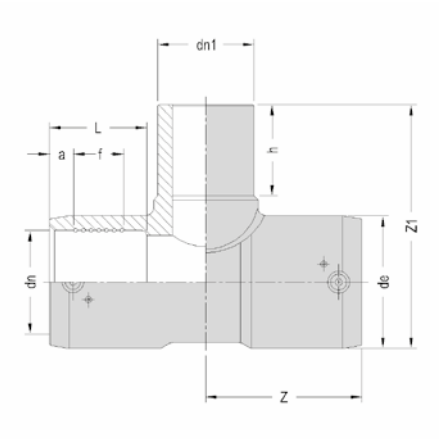

	DIMENSIONS								WEIGHTS
dn	dn1	de	L	f	a	h	Z	Z1	
25	25	39	33	15	11	60	53	111	95
32	32	44	44	28	10	48	64	94	105
40	40	54	49	37	11	57	73	112	175
50	50	66	55	36	12	62	81	128	300
63	63	81	61	32	13	72	94	153	420
75	75	96	64	29	18	75	113	176	700
90	90	116	70	37	18	85	125	202	1170
110	110	141	76	39	20	84	141	233	1725
125	125	161	79	42	19	100	156	269	2800
140	140	174	85	38	20	121	150	308	3200
160	160	206	89	51	20	127	184	350	5570
180	180	227	105	48	23	130	188	368	5810
200	200	252	112	55	23	135	205	400	7590

	WELDABILITY ON PIPE/FITTING PE 100	
dn	SDR 17	SDR 11
25		● ▲
32	● ▲	●
40	● ▲	●
50	●	●
63	●	●
75	●	●
90	●	●
110	●	●
125	●	●
140	●	●
160	●	●
180	●	●
200	●	●

● weldable only with monovalent welding units Series Euro
▲ minimum weldable thickness 3 mm

_ Moulded in PE 100-RC
_ Absolutely compulsory the use of aligning clamp for all diameters
_ Absolutely compulsory the pipes/fittings scraping

COD. 21.22.16

ELECTROFUSION REDUCED 90° TEE

SDR 11 - PN 16

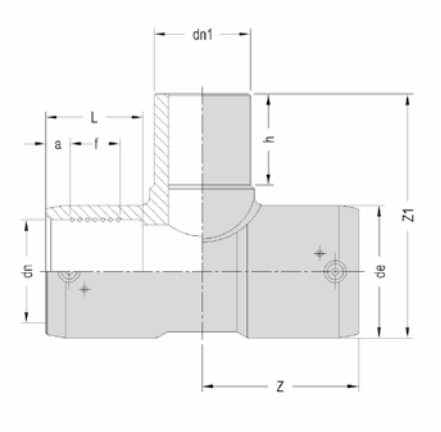

DIMENSIONS									WEIGHTS
dn	dn1	de	L	f	a	h	Z	Z1	
90	63	116	70	37	18	75	125	197	■
110	63	141	76	39	20	75	141	221	■
110	90	141	76	39	20	84	141	231	■
160	63	206	89	51	20	75	184	294	■
160	90	206	89	51	20	84	184	304	■
160	110	206	89	51	20	85	184	305	■

		WELDABILITY ON PIPE/FITTING PE 100	
dn	dn1	SDR 17	SDR 11
90	63	•	•
110	63	•	•
110	90	•	•
160	63	•	•
160	90	•	•
160	110	•	•

■ in preparation

_ Moulded in PE 100-RC
_ Absolutely compulsory the use of aligning clamp for all diameters
_ Absolutely compulsory the pipes/fittings scraping

COD. 21.36.16
ELECTROFUSION CAP
SDR 11 - PN 16

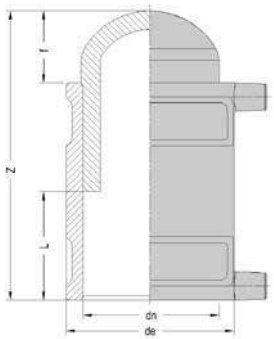

DIMENSIONS					WEIGHTS
dn	de	f	L	Z	
32	46	31	38	98	97
40	56	29	44	114	145
50	68	32	49	127	205
63	82	49	55	136	310
75	93	41	61	162	420
90	113	42	66	174	655
110	137	49	70	189	1050
125	152	42	76	194	1440
140	170	51	82	214	1900
160	198	48	86	220	2460
180	223	50	100	249	3635
200					●

WELDABILITY ON PIPE/FITTING PE 100			
dn	SDR 26	SDR 17	SDR 11
32		● ▲	●
40		● ▲	●
50		●	●
63		●	●
75		●	●
90	●	●	●
110	●	●	●
125	●	●	●
140	●	●	●
160	●	●	●
180	●	●	●
200	●	●	●

● weldable only with monovalent welding units Series Euro
▲ minimum weldable thickness 3 mm

● on request

COD. 21.36.25
ELECTROFUSION CAP
SDR 7,4 - PN 25

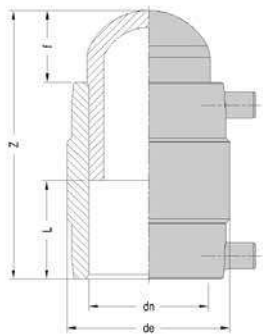

DIMENSIONS					WEIGHTS
dn	de	f	L	Z	
20	33	30	33	100	60
25	38	27	33	104	75
32	46	31	38	98	104
40	56	29	44	114	155
50	68	32	49	127	250
63	82	49	55	136	360
75	99	41	60	164	550
90	116	52	65	164	850
110	145	61	70	187	1400
125	163	42	76	198	1800
140	183	51	81	207	2400
160	207	45	86	211	3355
180					●
200					●

WELDABILITY ON PIPE/FITTING PE 100					
dn	SDR 26	SDR 17	SDR 11	SDR 9	SDR 7,4
20			● ▲	● ▲	●
25			● ▲	●	●
32		● ▲	●	●	●
40		● ▲	●	●	●
50		●	●	●	●
63		●	●	●	●
75		●	●	●	●
90	●	●	●	●	●
110	●	●	●	●	●
125	●	●	●	●	●
140	●	●	●	●	●
160	●	●	●	●	●
180	●	●	●	●	●
200	●	●	●	●	●

● weldable only with monovalent welding units Series Euro
▲ minimum weldable thickness 3 mm

_ Moulded in PE 100-RC
_ Absolutely compulsory the pipes/fittings scraping

COD. 21.51

ELECTROFUSION REDUCER

SDR 11 – PN 16

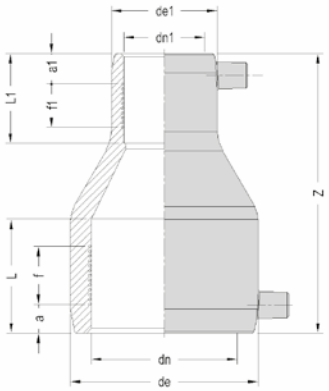

DIMENSIONS											WEIGHTS
dn	dn1	de	de1	L	L1	f	f1	a	a1	Z	
25	20	37	32	40	40	21	23	10	10	86	■
32	20	44	32	46	38	34	22	10	10	105	61
32	25	45	36	44	45	31	21	10	10	103	63
40	20	55	33	49	39	27	22	11	10	120	83
40	25	55	36	48	40	27	21	11	10	114	84
40	32	55	44	54	50	30	29	11	10	109	85
50	25	67	37	49	40	27	21	12	10	126	120
50	32	66	44	53	49	30	29	12	10	121	122
50	40	66	54	55	54	33	33	12	11	119	126
63	32	81	46	62	44	31	24	15	12	156	187
63	40	81	54	63	54	29	20	15	13	137	198
63	50	81	66	62	54	26	23	16	16	131	218
75	50	97	68	70	55	34	29	18	18	154	365
75	63	97	81	75	62	34	33	13	13	160	405
90	50	117	66	79	55	45	25	18	16	185	555
90	63	115	81	77	62	45	33	15	13	160	515
90	75	115	97	81	60	39	30	18	18	159	550
110	63	144	83	79	63	40	33	20	15	201	905
110	90	141	115	87	77	41	39	19	18	181	860
125	90	162	118	78	68	42	34	22	17	177	1100
125	110	162	144	79	73	33	36	22	20	164	1225
160	90	209	119	90	79	50	50	23	17	233	2340
160	110	208	144	95	82	48	37	25	20	218	2400
160	125	208	162	98	87	47	30	26	21	208	2505
180	125	229	165	103	79	46	39	29	15	254	3140
200	160	254	228	110	96	45	38	35	29	265	4000

■ in preparation

		WELDABILITY ON PIPE/FITTING PE 100	
dn	dn1	SDR 17	SDR 11
25	20		● ▲
32	20		● ▲
32	25		● ▲
40	20		● ▲
40	25		● ▲
40	32	● ▲	●
50	25		● ▲
50	32	● ▲	●
50	40	● ▲	●
63	32	● ▲	●
63	40	● ▲	●
63	50	●	●
75	50		●
75	63		●
90	50	●	●
90	63	●	●
90	75	●	●
110	63		●
110	90	●	●
125	90	●	●
125	110	●	●
160	90	●	●
160	110	●	●
160	125	●	●
180	125	●	●
200	160	●	●

● weldable only with universal ef units
● weldable only with monovalent welding units Series Euro
▲ minimum weldable thickness 3 mm

_ Moulded in PE 100-RC
_ Absolutely compulsory the use of aligning clamp for all diameters
_ Absolutely compulsory the pipes/fittings scraping

COD. 21.20A

ELECTROFUSION SPIGOT SADDLE MONOBLOC

SDR 11 - PN 16

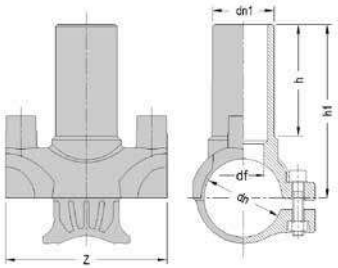

diam. 40x

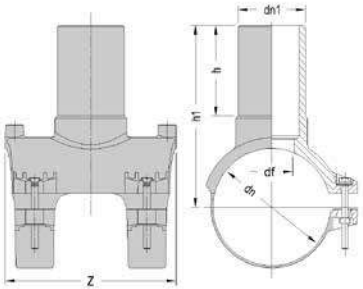

diam. 63x, 90x, 110x

	DIMENSIONS					WEIGHTS
dn	dn1	h	h1	Z	df	
40	20	65	99	84	13	100
40	25	65	100	84	17	100
40	32	65	101	84	25	100
63	20	60	110	110	13	130
63	25	60	110	110	17	140
63	32	65	112	110	25	150
63	40	65	115	110	32	170
63	50	80	135	110	38	180
90	20	60	122	125	13	230
90	25	60	127	125	17	235
90	32	65	131	125	25	240
90	40	65	131	125	32	245
90	50	80	151	125	38	270
90	63	85	160	125	48	320
110	25	60	137	162	17	338
110	32	65	141	162	25	350
110	40	65	141	162	32	350
110	50	80	161	162	38	385
110	63	85	170	162	48	435

df = cutter diameter

	WELDABILITY ON PIPE/FITTING PE 100	
dn	SDR 17	SDR 11
40x		●
63x	●	●
90x	●	●
110x	●	●

● weldable only with monovalent welding units Series Euro

● weldable only with:
- universal ef units
- monovalent ef unit Series Euro S1 plus
- monovalent ef unit Series Euro S1 prior updating

_ Boring after cooling is completed
_ Absolutely compulsory the pipe scraping in the welding area
_ Use steel cutter suitable for the largest inside branch diameter

COD. 21.20

ELECTROFUSION SPIGOT SADDLE

SDR 11 – PN 16

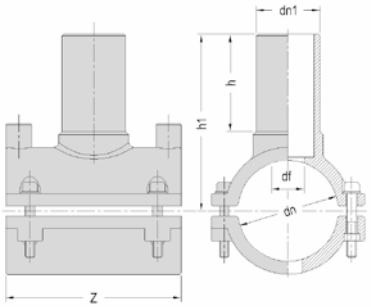

DIMENSIONS						WEIGHTS
dn	dn1	h	h1	Z	df	
50	20	52	159	101	13	200
50	25	59	165	101	17	200
50	32	110	170	101	25	250
63	63	88	153	125	48	380
75	25	65	123	125	17	400
75	32	65	123	125	25	400
75	40	70	128	125	32	450
75	50	80	144	125	38	450
75	63	90	159	125	48	500
125	25	56	143	160	17	900
125	32	57	143	160	25	900
125	40	62	147	160	32	950
125	50	67	158	160	38	950
125	63	75	173	160	48	1000
125	90	93	191	190	72	1200
140	25	65	159	160	17	1050
140	32	65	159	160	25	1050
140	40	70	163	160	32	1050
140	50	80	179	160	38	1100
140	63	90	194	160	48	1150
160	25	65	169	160	17	700
160	32	65	169	160	25	700
160	40	73	173	160	32	700
160	50	80	189	160	38	750
160	63	90	204	160	48	800
160	90	90	206	190	72	1570
160	110	96	218	190	88	1950

df = cutter diameter

DIMENSIONS						WEIGHTS
dn	dn1	h	h1	Z	df	
180	25	56	221	160	17	1850
180	32	65	179	160	25	1550
180	40	70	183	160	32	1600
180	50	80	199	160	38	1650
180	63	90	214	160	48	1650
180	90	93	218	190	72	2050
180	110	94	226	190	88	2350
200	25	65	189	160	17	1900
200	32	65	189	160	25	1800
200	40	70	193	160	32	1800
200	50	80	210	160	38	1850
200	63	90	225	160	48	1850
200	90	93	229	190	72	2350
200	110	93	237	190	88	1930
225	25	65	201	160	17	2100
225	32	65	201	160	25	2000
225	40	70	206	160	32	2000
225	50	80	222	160	38	2050
225	63	90	237	160	48	2100
225	90	93	241	190	72	2500
225	110	98	249	190	88	2700
250	32	58	205	190	25	2550
250	40	63	210	190	32	2550
250	50	68	221	190	38	2600
250	63	77	234	190	48	2650
250	90	93	254	190	72	3100
250	110	98	262	190	88	3300
315	32					■
315	63					■
315	110					■

with reinforce steel clip

WELDABILITY ON PIPE/FITTING PE 100			
dn	SDR 26	SDR 17	SDR 11
50x			●
63x			●
75x		●	●
125x		●	●
140x		●	●
160x	●	●	●
180x	●	●	●
200x	●	●	●
225x	●	●	●
250x	●	●	●

● weldable only with monovalent welding units Series Euro

● weldable only with universal ef units

■ in preparation

- Boring after cooling is completed
- Absolutely compulsory the pipe scraping in the welding area
- Use steel cutter suitable for the largest inside branch diameter

COD. 21.30A

ELECTROFUSION TAPPING SADDLE MONOBLOC

SDR 11 – PN 16

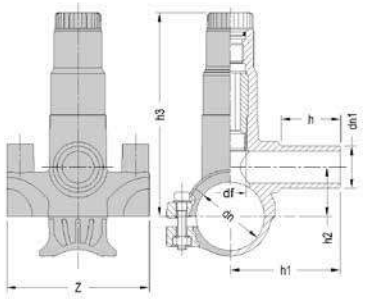

diam. 40x

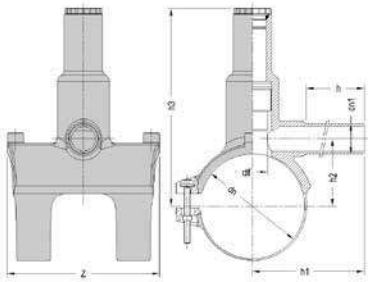

diam. 63x, 90x, 110x

	DIMENSIONS							WEIGHTS
dn	**dn1**	**h**	**h1**	**h2**	**h3**	**Z**	**df**	
40	**20**	66	96	29	110	84	18	200
40	**25**	66	96	29	110	84	18	200
40	**32**	66	96	29	110	84	18	200
63	**20**	77	114	43	157	110	25	315
63	**25**	77	114	43	157	110	25	330
63	**32**	77	114	43	157	110	25	335
63	**40**	77	118	48	157	110	30	370
63	**50**	81	122	48	157	110	30	390
63	**63**	95	124	48	157	110	30	430
90	**20**	77	130	60	195	126	32	415
90	**25**	77	130	60	195	126	32	435
90	**32**	77	135	60	195	126	32	445
90	**40**	77	138	60	195	126	32	470
90	**50**	81	143	60	195	126	32	490
90	**63**	113	145	60	195	126	32	530
110	**20**	77	130	71	208	162	32	583
110	**25**	77	130	71	208	162	32	587
110	**32**	77	135	71	208	162	32	593
110	**40**	77	139	71	208	162	32	619
110	**50**	81	144	71	208	162	32	647
110	**63**	113	148	71	208	162	32	675

df = cutter diameter

	WELDABILITY ON PIPE/FITTING PE 100	
dn	**SDR 17**	**SDR 11**
40x		●
63x	●	●
90x	●	●
110x	●	●

● weldable only with monovalent welding units Series Euro

● weldable only with:
- universal ef units
- monovalent ef unit Series Euro S1 plus
- monovalent ef unit Series Euro S1 prior updating

_ Boring after cooling is completed
_ Suitable for application on pipelines under pressure gas and water
_ Absolutely compulsory the pipe scraping in the welding area
_ No leakage from the cutter during the boring phase (except dia. 40x)
_ Cutter supplied with upper stroke end
_ Seal closing possible with electrofusion cap (except dia. 40x)

COD. 21.30

ELECTROFUSION TAPPING SADDLE

SDR 11 – PN 16

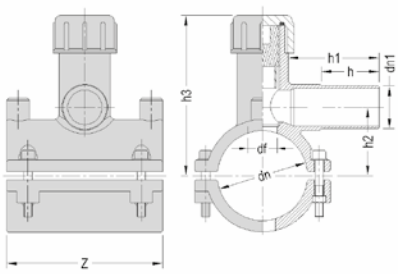

DIMENSIONS								WEIGHTS
dn	dn1	h	h1	h2	h3	Z	df	
50	20	50	54	71	131	101	16	300
50	25	54	54	71	131	101	16	300
50	32	60	78	40	102	102	18	300
75	20	70	90	63	133	125	25	600
75	25	70	90	63	133	125	25	600
75	32	70	107	74	133	125	25	600
75	40	72	120	63	133	125	25	650
75	50	72	120	63	160	125	30	750
75	63	93	120	63	160	125	30	850
125	20	70	90	87	165	160	25	1100
125	25	70	90	87	165	160	25	1100
125	32	70	108	84	165	160	25	1100
125	40	72	120	87	165	160	25	1200
125	50	72	120	87	187	160	30	1300
125	63	83	120	87	187	160	30	1350
140	20	70	90	96	165	160	25	1200
140	25	70	90	96	165	160	25	1250
140	32	70	105	96	165	160	25	1250
140	40	72	120	96	165	160	25	1250
140	50	72	120	96	167	160	30	1400
140	63	73	120	96	167	160	30	1450
160	20	70	90	108	184	160	25	850
160	25	70	90	104	184	160	25	850
160	32	70	106	105	185	160	25	900
160	40	72	120	104	185	160	25	950
160	50	72	120	104	208	160	30	1050
160	63	72	120	104	208	160	30	1100

DIMENSIONS								WEIGHTS
dn	dn1	h	h1	h2	h3	Z	df	
180	20	70	90	110	192	160	25	1750
180	25	70	90	110	192	160	25	1750
180	32	70	105	110	192	160	25	1750
180	40	72	120	110	192	160	25	1800
180	50	72	120	110	194	160	30	1900
180	63	72	120	110	194	160	30	1950
200	20	70	90	126	204	160	25	1850
200	25	70	90	126	204	160	25	1850
200	32	70	105	126	204	160	25	1850
200	40	72	120	126	204	160	25	1900
200	50	72	120	126	194	160	30	2000
200	63	64	120	126	194	160	30	2100
225	20	70	90	140	216	160	25	2000
225	25	70	90	140	216	160	25	2050
225	32	70	105	140	216	160	25	2050
225	40	72	120	140	216	160	25	2100
225	50	72	120	140	218	160	30	2250
225	63	64	120	140	218	160	30	2300
250	20	70	90	151	264	160	25	2450
250	25	70	90	151	264	160	25	2450
250	32	70	105	151	266	160	30	2600
250	40	72	120	151	266	160	30	2650
250	50	72	120	151	266	160	30	2650
250	63	64	120	151	266	160	30	2700
315	32							■
315	63							■

df = cutter diameter

WELDABILITY ON PIPE/FITTING PE 100			
dn	SDR 26	SDR 17	SDR 11
50x			●
75x		●	●
125x		●	●
140x		●	●
160x	●	●	●
180x	●	●	●
200x	●	●	●
225x	●	●	●
250x	●	●	●

● weldable only with monovalent welding units Series Euro

■ in preparation

_ Boring after cooling is completed
_ Suitable for application on pipelines under pressure gas and water
_ Absolutely compulsory the pipe scraping in the welding area
_ Do not remove the cutter after boring

COD. 21.73

ELECTROFUSION TAPPING SADDLE WITH VALVE

SDR 11 - PN 16

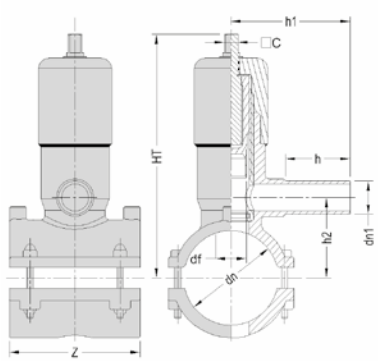

□C = square handling rod

- Boring after cooling is completed
- Suitable for application on pipelines under pressure gas and water
- Absolutely compulsory the pipe scraping in the welding area
- Integrated closing valve
- Handling rod with square conical connection of 13/15 mm

DIMENSIONS								WEIGHTS
dn	dn1	h	h1	h2	HT	Z	df	
75	32	80	128	69	260	125	30	2100
75	63	93	147	69	260	125	30	2200
90	32	80	128	69	267	125	30	2150
90	63	93	147	69	2267	125	30	2250
110	32	80	128	69	278	160	30	2500
110	63	83	147	69	278	160	30	2600
125	32	80	128	69	285	160	30	2550
125	63	83	147	69	285	160	30	2700
140	32	83	128	69	293	160	30	2700
140	63	73	147	69	293	160	30	2800
160	32	80	128	69	303	160	30	2900
160	63	72	147	69	303	160	30	3000
180	32	80	128	69	313	160	30	3200
180	63	72	147	69	313	160	30	3350
200	32	80	128	69	216	160	30	3400
200	63	64	147	69	216	160	30	3450
225	32	80	128	69	243	160	30	3600
225	63	64	147	69	243	160	30	3650
250	32	80	128	69	265	160	30	4000
250	63	64	147	69	265	160	30	4100

df = cutter diameter

	WELDABILITY ON PIPE/FITTING PE 100	
dn	SDR 17	SDR 11
75x	•	•
90x	•	•
110x	•	•
125x	•	•
140x	•	•
160x	•	•
180x	•	•
200x	•	•
225x	•	•
250x	•	•

COD. 21.73.50

FIXED HANDLING ROD

WITH PROTECTION PIPE

LENGTH (m)
0,75
1,25
1,50

COD. 21.73.60

TELESCOPIC HANDLING ROD

WITH PROTECTION PIPE

LENGTH (m)
0,80 - 1,20
0,90 - 1,50
1,10 - 1,90
1,40 - 2,50

SALDATRICE PER ELETTROFUSIONE
ELECTROFUSION CONTROL UNIT
EURO plus
Valid
Reset
M16-007
SALDATRICE PER ELETTROFUSIONE
ELECTROFUSION CONTROL UNIT
EURO plus
Valid
Reset
P16-279

ELECTROFUSION WELDING UNITS

MONOVALENT WELDING UNIT // POLYVALENT WELDING UNIT //

COD. 12.12 S1M

MONOVALENT ELECTROFUSION UNIT EURO S1 PLUS

The electrofusion welding unit model Euro S1 plus is a monovalent unit suitable for the welding of all electrofusion fittings of the Euro Series. It allows to operator to work at safety voltage lower than 50 Volt, is manufactured according to UNI 10566 and ISO 12176-2 standards, as well as provided with CE mark.

The heating power is automatically fixed according to the type and diameter of the electrofusion fitting, to the SDR of the pipe/fitting to be welded and to the ambient temperature.

The welding unit moded Euro S1 plus adopts the switching technology, which permits to be light and compact.

A display and the intuitive keyboard guide the operator during all operative phases of the programming, displaying the evolution of ambient temperature, the welding voltage and current, the cycle time, the progressive number of weldings and the possible error or malfunctioning messages.

When switching-on the supply voltate is measured and displayed for proper control.

The welding unit model Euro S1 plus is enabled in the storing of the operator code, of the site location, of the welding data and hour and of the welding parameters.

The welding unit model Euro S1 plus is supplied with USB connection port (pen drive is included) and serial port for the transfer of the welding data to the PC which afterwards can be used with DBManager Cloud for the management of the printing and storing operations.

The welding unit must be submitted to periodic overhaul (biennal) according to UNI 10566 standard.

CHARACTERISTICS

supply voltage	230V -20% / +15%
frequency	50/60 Hz
output voltage	< 50 V
inrush current	110 Amp
output current at 80%	80 Amp
max power consumption	4500 W
operating temperature	-10 °C +45 °C
port connections	USB/host - serial RS/232
protection	IP 54
working modes	manual with selection: fitting type, diameter, SDR fitting to be welded and SDR pipe to be welded
welding cycle memory capacity	n. 1600
connectors	4.0 mm
dimensions LxPxH	32x26x38 cm
weight	14 kg

COD. 12.19 SPP

POLYVALENT ELECTROFUSION UNIT EURO SP1 PLUS

The electrofusion welding unit model Euro SP1 plus is a polyvalent unit suitable for the welding of all electrofusion fittings up to diameter d. 710. It allows to operator to work at safety voltage lower than 50 Volt, is manufactured according to UNI 10566 and ISO 12176-2 standards, as well as provided with CE mark.

The heating power is **automatically** adjusted, reading of the barcode by means of a scanner or **manual** entering of the 24 digits shown under the barcode, or manually by setting of the welding voltage and time. Automatically (scanner or 24 digits) the heating power is adjusted by the ambient temperature.

The welding unit moded Euro SP1 plus adopts the switching technology, which permits to be light and compact.

A display and the intuitive keyboard guide the operator during all operative phases of the programming, displaying the evolution of ambient temperature, the welding voltage and current, the cycle time, the progressive number of weldings and the possible error or malfunctioning messages.

When switching-on the supply voltate is measured and displayed for proper control.

The welding unit model Euro SP1 plus is enabled in the storing of the operator code, of the site location, of the welding data and hour and of the welding parameters.

The scanner is enabled for the reading of the raceability barcodes of fittings and pipes and allows the maximum operative ease in all site conditions.

The welding unit model Euro SP1 plus is supplied with USB connection port (pen drive is included) and serial port for the transfer of the welding data to the PC which afterwards can be used with DBManager Cloud for the management of the printing and storing operations.

The welding unit must be submitted to periodic overhaul (biennal) according to UNI 10566 standard.

CHARACTERISTICS	
supply voltage	230V -20% / +15%
frequency	50/60 Hz
output voltage	8 ÷ 48 V
inrush current	110 Amp
output current at 80%	80 Amp
max power consumption	4500 W
operating temperature	-10 °C +45 °C
port connections	USB/host - serial RS/232
protection	IP 54
working range	20 ÷ 710 mm
working modes	barcode reading and
welding barcodes according to ISO 13950	welding - interleaved 2.5/24 digit
traceability barcodes according to ISO 12176/3/4	operator - interleaved 2.5/30 digit traceability - 128/26/40 digit
barcode reading system	scanner
manual system	setting: time and voltage or 24 digit barcode sequence
welding cycle capacity	n. 1600
connectors	4.0 mm
ancillary connectors	4.7 mm
dimensions LxPxH	32x26x38 cm
weight	17 kg
ancillary equipment on request	GPS

COD. 12.19 JUN

POLYVALENT ELECTROFUSION UNIT EURO JUNIOR

The electrofusion welding unit model Euro Junior is a polyvalent unit suitable for the welding of all electrofusion fittings up to diameter d. 160. It allows to operator to work at safety voltage lower than 50 Volt, is manufactured according to UNI 10566 and ISO 12176-2 standards, as well as provided with CE mark.

The heating power is **automatically** adjusted, reading of the barcode by means of a scanner or **manual** entering of the 24 digits shown under the barcode, or manually by setting of the welding voltage and time. Automatically (scanner or 24 digits) the heating power is adjusted by the ambient temperature.

A display and the intuitive keyboard guide the operator during all operative phases of the programming, displaying the evolution of ambient temperature, the welding voltage and current, the cycle time, the progressive number of weldings and the possible error or malfunctioning messages.

When switching-on the supply voltate is measured and displayed for proper control.

The welding unit model Euro Junior is enabled in the storing of the operator code, of the site location, of the welding data and hour and of the welding parameters.

The scanner is enabled for the reading of the raceability barcodes of fittings and pipes and allows the maximum operative ease in all site conditions.

The welding unit model Euro Junior is supplied with USB connection port (pen drive is included) to allow the transfer of the welding reports in PDF format to the PC.

The welding unit must be submitted to periodic overhaul (biennal) according to UNI 10566 standard.

CHARACTERISTICS	
supply voltage	230V +/-15%
frequency	50/60 Hz
output voltage	8 ÷ 42 V
inrush current	60 Amp
output current at 60%	27 Amp
max power consumption	2500 W
operating temperature	-10 °C +45 °C
port connections	USB/host
protection	IP 54
working range	20 ÷ 160 mm
working modes	barcode reading and manual setting
welding barcodes according to ISO 13950	welding - interleaved 2.5/24 digit
traceability barcodes according to ISO 12176/3/4	operator - interleaved 2.5/30 digit traceability - 128/26/40 digit
barcode reading system	scanner
manual system	setting: time and voltage or 24 digit barcode sequence
welding cycle capacity	n. 500
connectors	4.0 mm
ancillary connectors	4.7 mm
dimensions LxPxH	24x17x25 cm
weight	12 kg
ancillary equipment on request	transport bag

// WELDING BARCODE

The barcode is an universally recognized system to store up information and to allow their reading by proper systems such as scanner or light pen.

For the electrofusion system of polyethylene, the BARCODE type INTERLEAVED “2-in-5” with 24 digits with control character according to standard ISO 13950.

The information stored in the code, and carried on the label, allow the suitable control unit to understand automatically the characteristics of the fitting to be welded and to consequently work.

The code stores all information necessary for the electrofusion cycle: type of fitting, diameter, fusion time and cooling time, control character of a correct reading, identification key.

The main characteristic of this system is to avoid any possibility of errors in the fixing from the operator, who must only acquire the data from the barcode and confirm manually the correct reading.

The guarantee of correct code reading is determined from the control character carried on the label.

Possible differences between the fitting connected to the control unit and the wrong reading of the code are shown on the display, which does not proceed in the memorized sequence.

// TRACEABILITY BARCODE

It is an universally recognized system for “tracing” the information relative to the fitting and pipes welded (manufacturer, type of fitting, batch, raw material, production site, etc). All these information are stored in the BARCODE LABEL type CODE 128 with 26 digits with control character according to standard ISO 12176-4.

The reading of the barcode with optical pen/scanner on universal units allow to store all traceability data inside the ef unit and the subsequent transfer to PC, obtaining a complete traceability of the welding operations of the fittings.

Tangit
KS
Detergente
Speciale
Tangit
KS
Detergente
Speciale

ACCESSORIES

ALIGNING CLAMP // PIPE CUTTER // PIPE SCRAPER // DETERGENT //

// ALIGNING CLAMP

Protects the jointing, either during the electrofusion or the subsequent cooling, from external mechanical stresses, allows to revise possible off-centering between both ends to be welded and to recover the out-of-round of parts, if ovalized.

The aligning clamp is auxiliary to the control unit, its use is essential for the successful electrofusion jointing.

Simultaneous use of multiple aligning clamps will positively affect the speed of installation.

COD. 12.32/45/54

COD. 12.62

COD. 12.65/66

COD. 12.67

COD. 12.32	alignng clamp with movable joint and 4 jaws diam. 63 mm complete with reducing inserts diam. 20-25-32-40-50 mm
COD. 12.45	alignng clamp with movable joint and 4 jaws diam. 125 mm complete with reducing inserts diam. 20-25-32-40-50-63-75-90-110 mm
COD. 12.54	alignng clamp with movable joint and 4 jaws diam. 225 mm
COD. 12.55	series reducing inserts diam. 140
COD. 12.56	series reducing inserts diam. 160
COD. 12.57	series reducing inserts diam. 180
COD. 12.58	series reducing inserts diam. 200
COD. 12.62	aligning clamp with belt diam. 140 - 630 mm
COD. 12.65	aligning clamp with movable joint - type EASY-75 suitable for the welding of diam. 20 ÷ 75 mm
COD. 12.66	aligning clamp with movable joint - type EASY-125 suitable for the welding of diam. 32 ÷ 125 mm
COD. 12.67	aligning clamp with movable joint - type EASY-315 suitable for the welding of diam. 140 ÷ 315 mm

// PIPE CUTTER

A square cut of the pipe to be welded is carried by means of a pipe cutter, type with roller or with tool; choosing the type, it is important to verify the diameter according to the thickness of the pipe to be cut.

COD. 15.39/40/41

// PIPE SCRAPER

For the removal of the oxide layer on pipes/fittings are used manual scrapers with straight interchangeable blade and pipe scrapers, type mechanical which are fastened on the pipe end.

The use of this equipment means the perfect flatness of the pipe end, which is only achieved with the pipe cutter.

COD. 15.44/46

COD. 15.42

COD. 15.47/48

COD. 15.54

COD. 15.49

COD. 15.51/52

PIPE CUTTER	
COD. 15.39	diam. 20 - 63 mm (max cut thickness 7 mm)
COD. 15.40	diam. 50 - 125 mm (max cut thickness 13 mm)
COD. 15.41	diam. 110 - 160 mm (max cut thickness 16 mm)
MANUAL SCRAPER	
COD. 15.42	cutter usable on 4 sides by overturning on the central screw
PIPE SCRAPER	
COD. 15.47	type PS-180 diam. 75 - 180 mm
COD. 15.48	type PS-400 diam. 125 - 400 mm
COD. 15.44	type RTC-315 diam. 75 - 315 mm
COD. 15.46	type RTC-710 diam. 355 - 710 mm
COD. 15.54	type ERT-500 diam. 110 - 500 mm suitable ONLY for pipes
PIPE SCRAPER EURO-DRILL	
COD. 15.49/20	diam. 20 mm
COD. 15.49/25	diam. 25 mm
COD. 15.49/32	diam. 32 mm
COD. 15.49/40	diam. 40 mm
COD. 15.49/50	diam. 50 mm
COD. 15.49/63	diam. 63 mm
ORBITAL PIPE SCRAPER	
COD. 15.51	type EURO 125 suitable for the pipe scraping from diam. 25 up to 125 mm
COD. 15.52	type EURO 200 suitable for the pipe scraping from diam. 63 up to 200 mm

// DETERGENT

Special detergent for polyethylene (PE) and polypropylene (PP) weldings

COD. 15.50

chemical feature	mixture of aliphatic solvents
specific weight	ca. 0,7 g/cm^3
packing	nr. 8 plastic bottles of 1 liter each

_ Detergent suitable for the cleaning in the welding process of PE pipes and fittings

// BUTTFUSION WELDING UNITS

The buttfusion welding unit model TE is built according to the UNI 10565 standard, is provided with CE marking and guarantees:

- a correct axial adjustment/movement of the pipes through the clamps;
- a proper and true facing of the pipes/fittings through the facer tool;
- an accurate control of the welding pressure and of the temperature of the heating plate;
- the conformity to the safety standard regulations.

Each machine can buttweld different diameters; according to the pipe diameter, the reducing inserts are fitted into the standard clamps.

The buttfusion machine consists of a supporting mounting with fixed and movable clamps. Those movable, hydraulically driven with manual or electrical control, are rolling on two guides. The machine is provided with an electrical facer tool, an electrically heating plate, an electro-hydraulic unit with distributor and pressure gauge with manometer. The heating plate guarantees uniform temperature on its whole surface. The temperature control is carried out with an adjustable thermostat which guarantees a maximal variation of ± 2°C of the stated temperature. The welding unit must be submitted to periodic overhaul (biennal) according to UNI 10565 standard.

The buttfusion units are provided with industrial plug, IEC standards protective measures, 2 poles + earth 16A - 220V.

CHARACTERISTICS	TE 160	TE 200	TE 250	TE 315
Maximal power				
Hydraulic unit	370 W	370 W	370 W	750 W
Facer tool	800 W	800 W	1000 W	1150 W
Heating plate	1000 W	1420 W	2300 W	3000 W
Weight (kg)				
Base mounting	35,0	46,0	45,0	78,0
Hydraulic unit	26,0	26,0	26,0	28,0
Facer tool	11,0	13,0	14,5	27,0
Heating plate	5,0	6,5	10,0	13,0
Supply voltage	230V ± 10% - 50 Hz			

EURO
STANDARD

Design: Mugrafik - Sonia Lunardelli // Photo: Matteo de Stefano - Archivio Eurostandard

FILIALI // BRANCHES

EUROSTANDARD CHILE SA
Camino la Botella 499
PUDAHUEL SANTIAGO
CHILE

EUROMEGA MANUFACTURING SDN BHD
no. 12 Jalan Bursa 23/G Section 23
SHAH ALAM - SELANGOR
MALAYSIA

SIA EUROSTANDARD NORDIC
Katlakalna Iela, 9
LV-1073 RIGA
LATVIA

EUROSTANDARD S.p.A.

Zona Industriale Lago 22
38038 Tesero (TN) - ITALIA
info@eurostandard.it
T +39 0462 811 211
F +39 0462 811 200
www.eurostandard.it